PROPOSED SITE PLAN OF LAND AT

73 & 77 CROSS ROAD
HAVERHILL, MASSACHUSETTS

OCTOBER 6, 2016

OWNER:

CLAIR & ROGER LAROCHE
152 ABBOT ST.
NO. ANDOVER, MA 01845

APPLICANT:

RKACO, L.L.C.
1501 MAIN ST.
TEWKSBURY, MA.

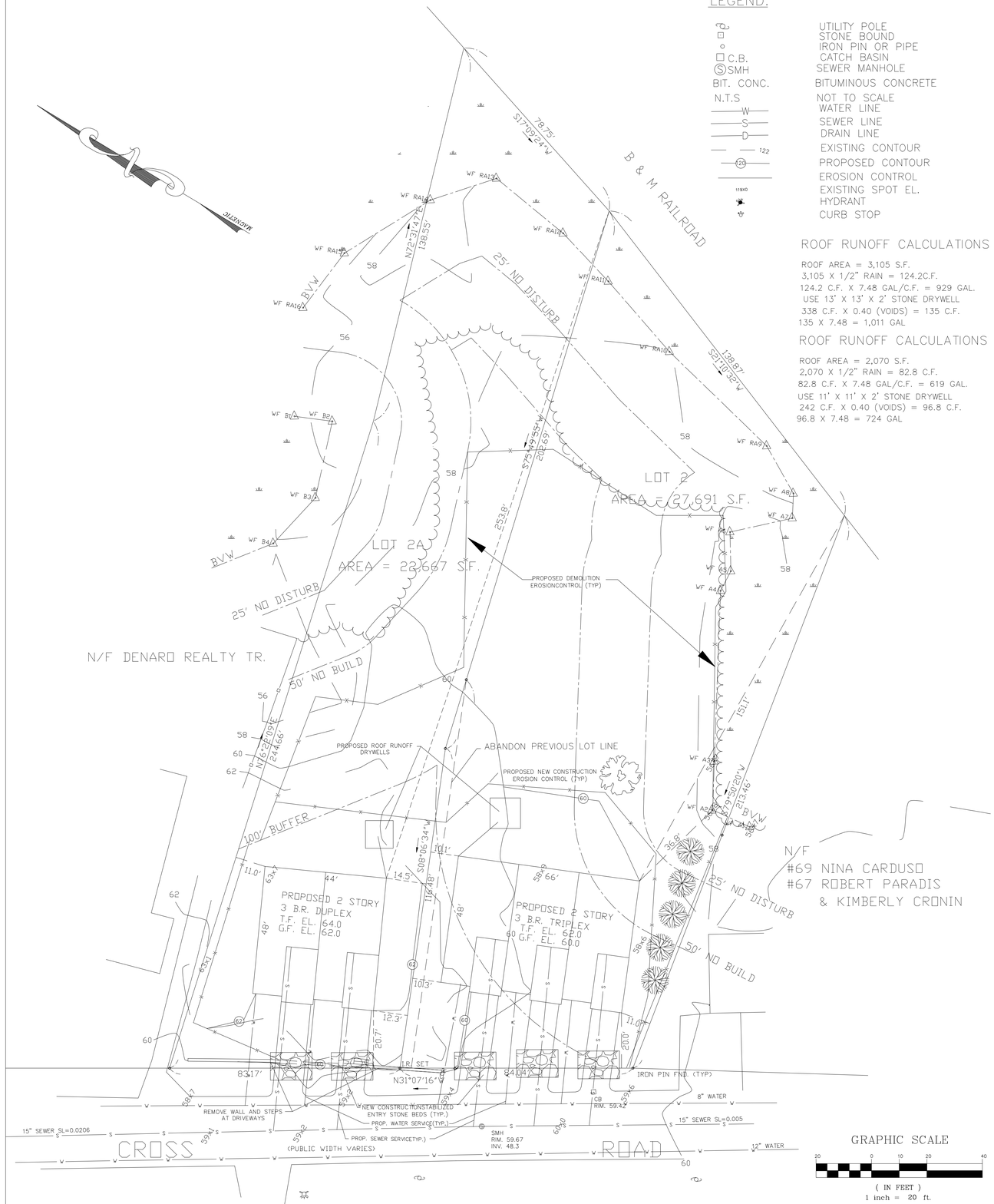

LEGEND:

	UTILITY POLE
	STONE BOUND
	IRON PIN OR PIPE
	CATCH BASIN
S	SEWER MANHOLE
BIT. CONC.	BITUMINOUS CONCRETE
N.T.S	NOT TO SCALE
W	WATER LINE
S	SEWER LINE
D	DRAIN LINE
122	EXISTING CONTOUR
120	PROPOSED CONTOUR
	EROSION CONTROL
119X0	EXISTING SPOT EL.
	HYDRANT
	CURB STOP

ROOF RUNOFF CALCULATIONS TRIPLEX

ROOF AREA = 3,105 S.F.
3,105 X 1/2" RAIN = 124.2C.F.
124.2 C.F. X 7.48 GAL/C.F. = 929 GAL.
USE 13' X 13' X 2' STONE DRYWELL
338 C.F. X 0.40 (VOIDS) = 135 C.F.
135 X 7.48 = 1,011 GAL

ROOF RUNOFF CALCULATIONS DUPLEX

ROOF AREA = 2,070 S.F.
2,070 X 1/2" RAIN = 82.8 C.F.
82.8 C.F. X 7.48 GAL/C.F. = 619 GAL.
USE 11' X 11' X 2' STONE DRYWELL
242 C.F. X 0.40 (VOIDS) = 96.8 C.F.
96.8 X 7.48 = 724 GAL

GRAPHIC SCALE

20 0 10 20 40

(IN FEET)
1 inch = 20 ft.

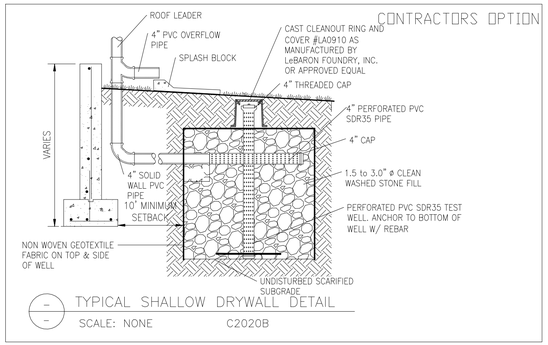

TYPICAL SHALLOW DRYWALL DETAIL
SCALE: NONE C2020B

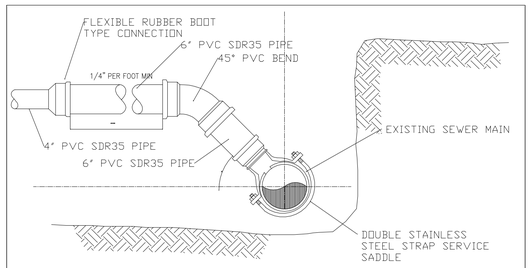

TYPICAL SADDLE TYPE CONNECTION
SCALE: NONE

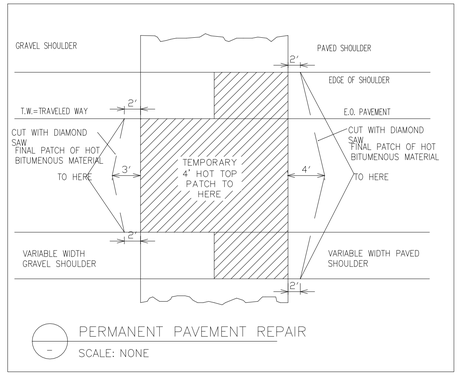

PERMANENT PAVEMENT REPAIR
SCALE: NONE

EARTH CONSTRUCTION

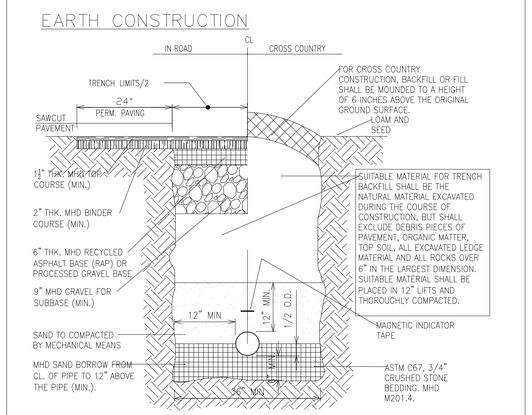

TRENCH DETAILS
SCALE: 3/4" = 1'-0" C3024A

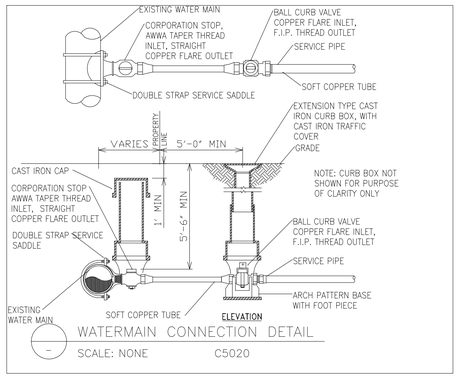

WATERMAIN CONNECTION DETAIL
SCALE: NONE C5020

TYPICAL SECTIONS OF SURFACE TREATMENTS

	DESCRIPTION	SECTION
1/1	NEW BITUMINOUS PAVEMENT	3 1/2" BIT. CONC. PAVEMENT; 1-1/2" MHD WEARING COURSE; 2" MHD BINDER COURSE; 6" GRAVEL BASE; 9" PROCESSED GRAVEL SUBBASE; COMPACTED SUBGRADE
2/1	LOAMING AND SEEDING	6" PREPARED LOAM WITH SEED; COMPACTED SUBGRADE

SHEET 2 OF 2 NEW CONSTRUCTION

ROBERT A. MASYS, PE

R.A.M. ENGINEERING
160 Main Street
Haverhill, Massachusetts 01830
TEL: (978) 372-0449 FAX: (978) 372-7183