PROPOSED SITE PLAN OF LAND AT

73 & 77 CROSS ROAD
HAVERHILL, MASSACHUSETTS

OCTOBER 6, 2016

REVISED 10/26/2016
REVISED 11/02/2016

OWNER:

CLAIR & ROGER LAROCHE
152 ABBOT ST.
NO. ANDOVER, MA 01845

APPLICANT:

RKACO, L.L.C.
1501 MAIN ST.
TEWKSBURY, MA.

LEGEND:

	UTILITY POLE
	STONE BOUND
	IRON PIN OR PIPE
C.B.	CATCH BASIN
SMH	SEWER MANHOLE
BIT. CONC.	BITUMINOUS CONCRETE
N.T.S	NOT TO SCALE
W	WATER LINE
S	SEWER LINE
D	DRAIN LINE
122	EXISTING CONTOUR
120	PROPOSED CONTOUR
	EROSION CONTROL
119KO	EXISTING SPOT EL.
	HYDRANT
	CURB STOP
	TREE LINE

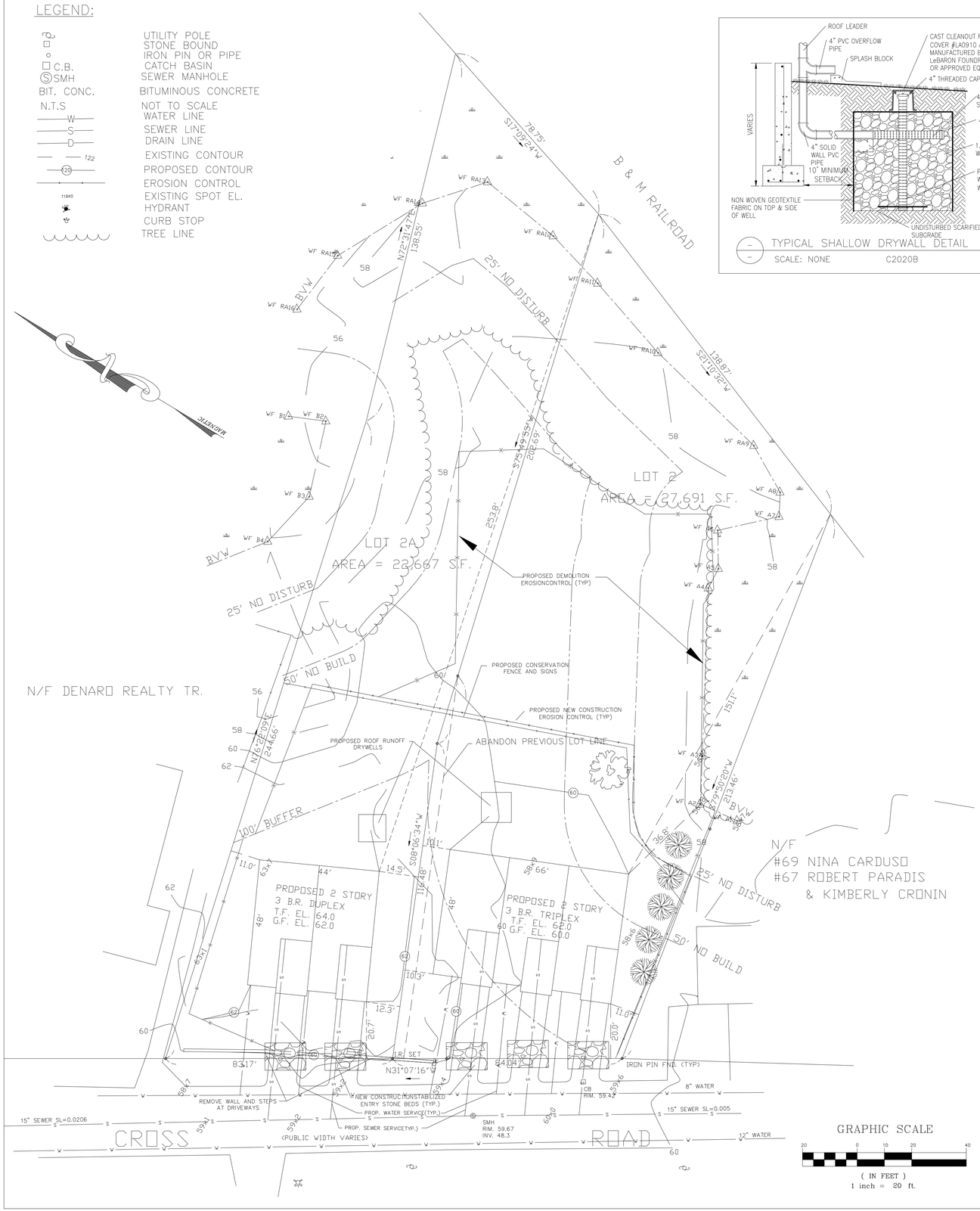

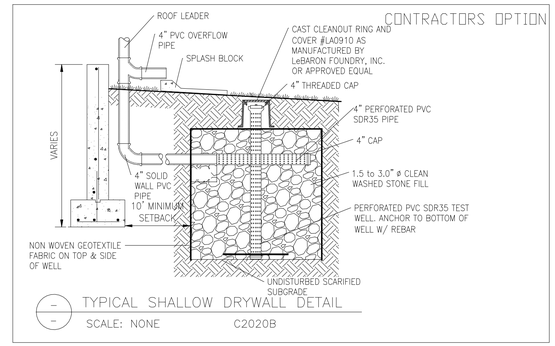

TYPICAL SHALLOW DRYWALL DETAIL
SCALE: NONE C2020B

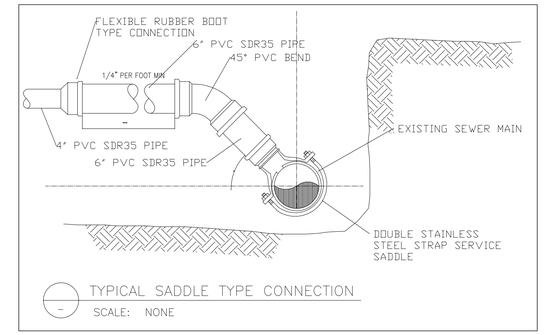

TYPICAL SADDLE TYPE CONNECTION
SCALE: NONE

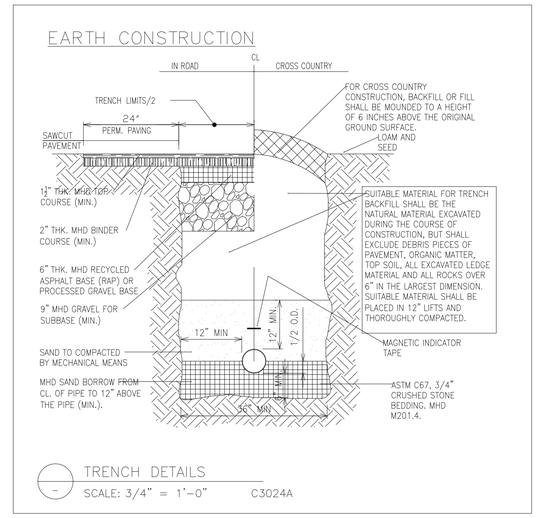

TRENCH DETAILS
SCALE: 3/4" = 1'-0" C3024A

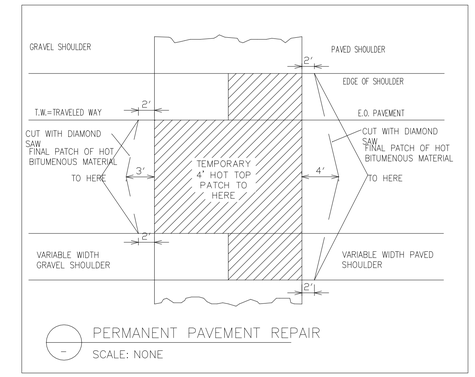

PERMANENT PAVEMENT REPAIR
SCALE: NONE

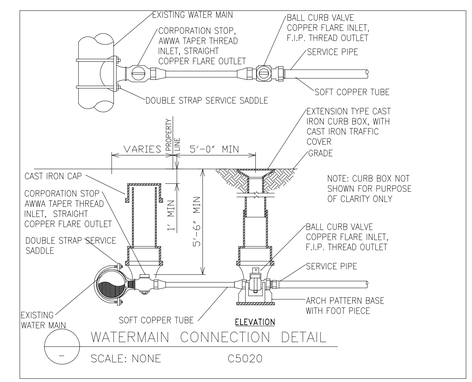

WATERMAIN CONNECTION DETAIL
SCALE: NONE C5020

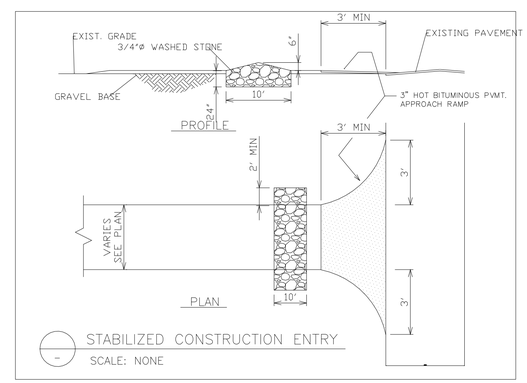

STABILIZED CONSTRUCTION ENTRY
SCALE: NONE

TYPICAL SECTIONS OF SURFACE TREATMENTS

DESCRIPTION	SECTION
1/1 NEW BITUMINOUS PAVEMENT	3-1/2" BIT. CONC. PAVEMENT; 1-1/2" MHD WEARING COURSE; 2" MHD BINDER COURSE; 6" GRAVEL BASE; 9" PROCESSED GRAVEL SUBBASE; COMPACTED SUBGRADE
2/1 LOAMING AND SEEDING	6" PREPARED LOAM WITH SEED; COMPACTED SUBGRADE

SHEET 2 OF 2 NEW CONSTRUCTION

SEE SHEET 1 FOR NOTES AND SEQUENCE

ROBERT A. MASYS, PE

R.A.M. ENGINEERING
160 Main Street
Haverhill, Massachusetts 01830
TEL: (978) 372-0449 FAX: (978) 372-7183