REPLACEMENT OF BRANDY BROW ROAD CULVERT OVER EAST MEADOW RIVER

IN THE CITY OF
HAVERHILL
ESSEX COUNTY
COMMONWEALTH OF MASSACHUSETTS

INDEX

SHEET NO.	DESCRIPTION
1	TITLE SHEET & INDEX
2	LEGEND & ABBREVIATIONS
3	TYPICAL SECTIONS
4	CONSTRUCTION PLAN
5	CONSTRUCTION PROFILE
6	GRADING PLAN
7 - 8	CONSTRUCTION DETAILS
9 - 17	BRIDGE PLANS
18 - 20	CROSS SECTIONS

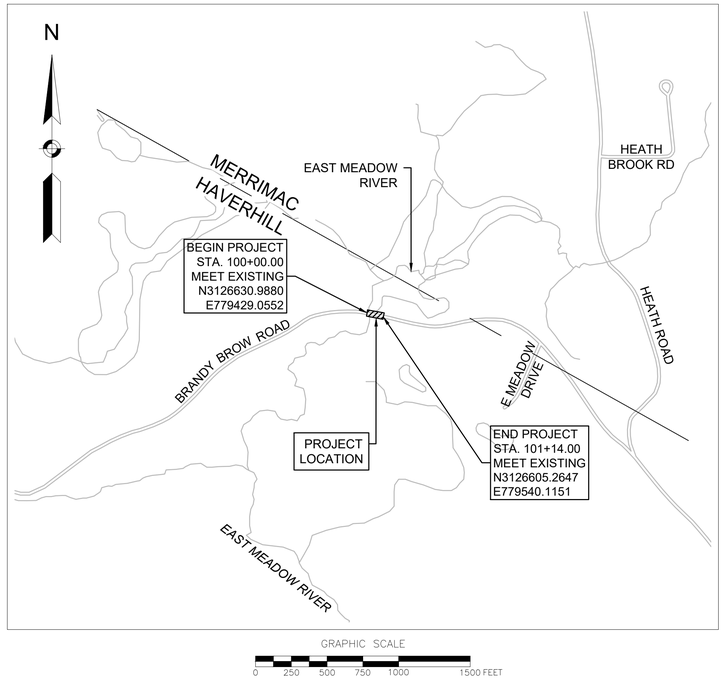

THESE PLANS ARE SUPPLEMENTED BY THE LATEST EDITIONS OF THE FOLLOWING PUBLICATIONS, AS IDENTIFIED IN THE CONTRACT SPECIAL PROVISIONS: THE MASSDOT CONSTRUCTION STANDARD DETAILS, THE MASSDOT STANDARD DRAWINGS FOR SIGNS AND SUPPORTS, THE MASSDOT STANDARD DRAWINGS FOR TRAFFIC SIGNALS AND HIGHWAY LIGHTING, THE MASSDOT OVERHEAD SIGNAL STRUCTURE AND FOUNDATION STANDARD DRAWINGS, THE MASSDOT TRAFFIC MANAGEMENT PLANS AND DETAIL DRAWINGS, AND THE ANSI AMERICAN STANDARD FOR NURSERY STOCK.

MELINDA E. BARRETT, MAYOR

KAITLIN M. WRIGHT, CITY CLERK

CITY COUNCIL
THOMAS J. SULLIVAN, PRESIDENT

HIGHWAY & PARKS
MICHAEL ARPINO, HIGHWAY SUPERINTENDENT

ENGINEERING DEPARTMENT
JOHN H. PETTIS

DPW
ROBERT E. WARD, DPW DIRECTOR

WPA NOTICE OF INTENT PLANS

LENGTH OF PROJECT = 114.00 FEET = 0.022 MILES

GPI Engineering Design Planning Construction Inspection
978.570.2999 GPINET.COM
Greenman-Pedersen, Inc.
181 Ballardvale Street, Suite 202
Wilmington, MA 01887

PREPARED FOR
CITY OF HAVERHILL
4 SUMMER STREET
HAVERHILL, MA 01830

REPLACEMENT OF BRANDY BROW ROAD CULVERT OVER EAST MEADOW RIVER
BRANDY BROW ROAD
HAVERHILL, MASSACHUSETTS

REVISIONS

NO.	REVISION	DATE

11/06/2025

DRAWN/DESIGN BY	CHECKED BY
NHG/GBP	GJH

TITLE SHEET & INDEX

SCALE: AS NOTED

NEX-2300100.00

2300100.00_HD (CS)NOI.DWG 12/17/2024

GENERAL SYMBOLS

EXISTING	PROPOSED	DESCRIPTION
JB	JB	JERSEY BARRIER
CB	CB	CATCH BASIN
		CATCH BASIN CURB INLET
FP	FP	FLAG POLE
GP	GP	GAS PUMP
MB	MB	MAIL BOX
		POST SQUARE
		POST CIRCULAR
WELL	WELL	WELL
EHH	EHH	ELECTRIC HANDHOLE
		FENCE GATE POST
GG	GG	GAS GATE
BHL #	BHL #	BORING HOLE
MW #	MW #	MONITORING WELL
TP #	TP #	TEST PIT
		HYDRANT
		LIGHT POLE
CO.BD.		COUNTY BOUND
		GPS POINT
		CABLE MANHOLE
		DRAINAGE MANHOLE
		ELECTRIC MANHOLE
		GAS MANHOLE
		MISC MANHOLE
		SEWER MANHOLE
		TELEPHONE MANHOLE
		WATER MANHOLE
MHB	MHB	MASSACHUSETTS HIGHWAY BOUND
MON		MONUMENT
SB		STONE BOUND
TB		TOWN OR CITY BOUND
		TRAVERSE OR TRIANGULATION STATION
TPL or GUY	TPL or GUY	TROLLEY POLE OR GUY POLE
HTP		TRANSMISSION POLE
UFB	UFB	UTILITY POLE W/ FIREBOX
UPDL	UPDL	UTILITY POLE WITH DOUBLE LIGHT
ULT	ULT	UTILITY POLE W / 1 LIGHT
UPL	UPL	UTILITY POLE
		BUSH
SIZE & TYPE		TREE
		STUMP
		SWAMP / MARSH
WG	WG	WATER GATE
PM	PM	PARKING METER
		OVERHEAD CABLE/WIRE
		CURBING
100 99		CONTOURS (ON-THE-GROUND SURVEY DATA)
100 99		CONTOURS (PHOTOGRAMMETRIC DATA)
		UNDERGROUND DRAIN PIPE (DOUBLE LINE 24 INCH AND OVER)
		UNDERGROUND ELECTRIC DUCT (DOUBLE LINE 24 INCH AND OVER)
		UNDERGROUND GAS MAIN (DOUBLE LINE 24 INCH AND OVER)
		UNDERGROUND SEWER MAIN (DOUBLE LINE 24 INCH AND OVER)
		UNDERGROUND TELEPHONE DUCT (DOUBLE LINE 24 INCH AND OVER)
		UNDERGROUND WATER MAIN (DOUBLE LINE 24 INCH AND OVER)
		BALANCED STONE WALL
		GUARD RAIL - STEEL POSTS
		GUARD RAIL - WOOD POSTS
		CHAIN LINK OR METAL FENCE
		WOOD FENCE
		HAY BALES/SILT FENCE
		TREE LINE
		SAWCUT LINE
		TOP OR BOTTOM OF SLOPE
		LIMIT OF EDGE OF PAVEMENT OR COLD PLANE AND OVERLAY
		BANK OF RIVER OR STREAM
		BORDER OF WETLAND
		100 FT WETLAND BUFFER
		200 FT RIVERFRONT BUFFER
		STATE HIGHWAY LAYOUT
		TOWN OR CITY LAYOUT
		COUNTY LAYOUT
		RAILROAD SIDELINE
		TOWN OR CITY BOUNDARY LINE
		PROPERTY LINE OR APPROXIMATE PROPERTY LINE
		EASEMENT

PAVEMENT MARKINGS SYMBOLS

EXISTING	PROPOSED	DESCRIPTION
		PAVEMENT ARROW - WHITE
ONLY	ONLY	LEGEND "ONLY" - WHITE
	SL	STOP LINE
	CW	CROSSWALK
	SWL	SOLID WHITE LINE
	SYL	SOLID YELLOW LINE
	BWL	BROKEN WHITE LINE
	BYL	BROKEN YELLOW LINE
	DWL	DOTTED WHITE LINE
	DYL	DOTTED YELLOW LINE
	DWLEx	DOTTED WHITE LINE EXTENSION
	DYLEx	DOTTED YELLOW LINE EXTENSION
	DBWL	DOUBLE WHITE LINE
	DBYL	DOUBLE YELLOW LINE

* BROKEN WHITE/YELLOW LINES TO BE 10' LINE SEGMENTS WITH 30' GAPS (TYP.) (BYL ON SHARED USE PATH TO BE 3' IN LENGTH WITH 9' GAP)

** DWLEx AND DYLEx LINES TO BE 2' IN LENGTH WITH 6' GAP (TYP.)

*** DWL AND DYL LINES TO BE 3' IN LENGTH WITH 9' GAP (TYP.) (IF WIDE LINE IS SPECIFIED, THE WIDTH SHALL BE 12")

GENERAL NOTES

1. TOPOGRAPHICAL INFORMATION WAS PROVIDED BY GREENMAN-PEDERSEN, INC., JANUARY 2024 (978-570-2999). VERTICAL DATUM IS BASED ON NAVD88. HORIZONTAL DATUM IS BASED ON MA. MAINLAND NAD83.
2. THE LOCATIONS OF EXISTING UNDERGROUND UTILITIES ARE SHOWN IN AN APPROXIMATE WAY ONLY AND HAVE NOT BEEN INDEPENDENTLY VERIFIED BY THE OWNER OR ITS REPRESENTATIVE. THE CONTRACTOR SHALL DETERMINE THE EXACT LOCATION OF ALL EXISTING UTILITIES BEFORE COMMENCING WORK, AND AGREES TO BE FULLY RESPONSIBLE FOR ANY AND ALL DAMAGES WHICH MIGHT BE OCCASIONED BY THE CONTRACTOR'S FAILURE TO LOCATE EXACTLY AND TO PRESERVE ANY AND ALL UNDERGROUND UTILITIES. CALL "DIG-SAFE" 1-888-DIGSAFE (344-7233) AT LEAST 72 HOURS BEFORE COMMENCING CONSTRUCTION.
3. WHERE AN EXISTING UNDERGROUND UTILITY IS FOUND TO CONFLICT WITH THE PROPOSED WORK, THE LOCATION, ELEVATION AND SIZE OF THE UTILITY SHALL BE ACCURATELY DETERMINED WITHOUT DELAY BY THE CONTRACTOR, AND THE INFORMATION FURNISHED TO THE ENGINEER FOR RESOLUTION OF THE CONFLICT.
4. THE CONTRACTOR SHALL MAKE ALL ARRANGEMENTS FOR THE ALTERATION AND ADJUSTMENT OF GAS, ELECTRIC, TELEPHONE AND ANY OTHER PRIVATE UTILITIES BY THE UTILITY COMPANIES.
5. AREAS OUTSIDE THE LIMITS OF PROPOSED WORK DISTURBED BY THE CONTRACTOR'S OPERATIONS SHALL BE RESTORED BY THE CONTRACTOR TO THEIR ORIGINAL CONDITION AT THE CONTRACTOR'S EXPENSE.
6. THE TERM "PROPOSED" (PROP.) MEANS WORK TO BE CONSTRUCTED USING NEW MATERIALS, OR, WHERE APPLICABLE, RE-USING EXISTING MATERIALS IDENTIFIED AS "REMOVE & RESET" (R&R).
7. ALL EXISTING SIGNS WITHIN THE PROJECT LIMITS SHALL BE RETAINED UNLESS NOTED OTHERWISE.
8. ALL PROPOSED PAVEMENT MARKINGS SHALL BE THERMOPLASTIC.
9. ALL EXISTING CITY LOCATION LINES HAVE BEEN ESTABLISHED BY CADASTRAL SURVEY AND FOUND MONUMENTATION. PRIVATE PROPERTY LINES HAVE BEEN ESTABLISHED FROM AVAILABLE INFORMATION AND THEIR EXACT LOCATIONS ARE NOT GUARANTEED.
10. ALL TRANSVERSE JOINTS, AND ALL LONGITUDINAL JOINTS BETWEEN NEW SURFACE PAVEMENT AND EXISTING SURFACE PAVEMENT TO REMAIN SHALL BE COATED WITH A HOT POURED RUBBERIZED ASPHALT ADHESIVE MEETING THE REQUIREMENTS OF ITEM 453.
11. ALL DISTURBED AREAS NOT DESIGNATED TO BE PAVED SHALL HAVE LOAM BORROW PLACED AND SEEDED. THE LOAM BORROW SHALL HAVE A MINIMUM DEPTH OF 4 INCHES AND SHALL BE PLACED FLUSH WITH THE TOP OF THE ADJACENT CURB, EDGING, BERM OR PAVEMENT SURFACE.
12. THE LIMIT OF WORK AREA SHALL BE THE STREET RIGHT OF WAY UNLESS SHOWN OTHERWISE.
13. PRIOR TO THE START OF ANY NEW UTILITY WORK, ALL ELEVATIONS OF EXISTING UTILITIES IN THOSE AREAS ARE TO BE VERIFIED. THE ENGINEER IS TO BE NOTIFIED IMMEDIATELY SHOULD ANY DISCREPANCIES OCCUR.
14. ALL CASTINGS SHALL BE SET FLUSH WITH FINISHED GRADE.
15. ALL PUBLICLY OWNED GATE BOXES, SERVICE BOXES, MANHOLE FRAMES AND COVERS SHALL BE ADJUSTED TO GRADE BY THE CONTRACTOR.
16. ALL NEW SIDEWALK AND DRIVEWAY GRADES SHALL MATCH EXISTING GRADES AT BACK OF SIDEWALK LINE UNLESS SHOWN OTHERWISE ON THE PLANS AND CROSS SECTIONS.
17. THE CONTRACTOR SHALL TAKE EVERY PRECAUTION TO PROTECT ALL EXISTING TREES AND ROOTS THAT ARE NOT DESIGNATED FOR REMOVAL.
18. CONTRACTOR TO CONTACT ENGINEER PRIOR TO INSTALLATION OF BOUNDS FOR FINAL LOCATIONS.
19. DRAINAGE ELEVATIONS ARE PROVIDED FOR DESIGN PURPOSES ONLY. THE CONTRACTOR SHALL VERIFY BY TEST PIT, THE LOCATIONS OF EXISTING UTILITIES WHICH MAY CONFLICT WITH THE PROPOSED DRAINAGE DESIGN. ANY FIELD ADJUSTMENTS REQUIRED WILL BE MADE AS APPROVED OR DIRECTED BY THE ENGINEER. ONLY AFTER THE CONTRACTOR VERIFIES ELEVATIONS FOR THE CONSTRUCTABILITY OF THE DRAINAGE SYSTEM SHALL ANY STRUCTURES BE ORDERED. ANY FIELD ADJUSTMENTS TO LINE & GRADE UP TO A DEPTH OF 5' SHALL BE INCLUDED IN THE COST OF THE PIPE. PIPE EXCAVATION GREATER THAN 5' WILL BE PAID UNDER CLASS B TRENCH EXCAVATION.

GENERAL ABBREVIATIONS

AADT	ANNUAL AVERAGE DAILY TRAFFIC
ABAN	ABANDON
ADJ	ADJUST
APPROX.	APPROXIMATE
A.C.	ASPHALT CONCRETE
ACCM PIPE	ASPHALT COATED CORRUGATED METAL PIPE
BIT.	BITUMINOUS
BC	BOTTOM OF CURB
BD.	BOUND
BL	BASELINE
BLDG	BUILDING
BM	BENCHMARK
BO	BY OTHERS
BOS	BOTTOM OF SLOPE
BR.	BRIDGE
CB	CATCH BASIN
CBCI	CATCH BASIN WITH CURB INLET
CC	CEMENT CONCRETE
CCM	CEMENT CONCRETE MASONRY
CEM	CEMENT
CI	CURB INLET
CIP	CAST IRON PIPE
CLF	CHAIN LINK FENCE
CL	CENTERLINE
CMP	CORRUGATED METAL PIPE
CSP	CORRUGATED STEEL PIPE
CO.	COUNTY
CONC	CONCRETE
CONT	CONTINUOUS
CONST	CONSTRUCTION
CR GR	CROWN GRADE
DHV	DESIGN HOURLY VOLUME
DI	DROP INLET
DIA	DIAMETER
DIP	DUCTILE IRON PIPE
DW	STEADY DON'T WALK - PORTLAND ORANGE
DWY	DRIVEWAY
ELEV (or EL.)	ELEVATION
EMB	EMBANKMENT
EOP	EDGE OF PAVEMENT
EXIST (or EX)	EXISTING
EXC	EXCAVATION
F&C	FRAME AND COVER
F&G	FRAME AND GRATE
FDN.	FOUNDATION
FLDSTN	FIELDSTONE
GAR	GARAGE
GD	GROUND
GG	GAS GATE
GI	GUTTER INLET
GIP	GALVANIZED IRON PIPE
GRAN	GRANITE
GRAV	GRAVEL
GRD	GUARD
HDW	HEADWALL
HMA	HOT MIX ASPHALT
HOR	HORIZONTAL
HYD	HYDRANT
INV	INVERT
JCT	JUNCTION
L	LENGTH OF CURVE
LB	LEACH BASIN
LP	LIGHT POLE
LT	LEFT
MAX	MAXIMUM
MB	MAILBOX
MH	MANHOLE
MHB	MASSACHUSETTS HIGHWAY BOUND
MIN	MINIMUM
NIC	NOT IN CONTRACT
NO.	NUMBER
PC	POINT OF CURVATURE
PCC	POINT OF COMPOUND CURVATURE
PCR	PEDESTRIAN CURB RAMP
P.G.L.	PROFILE GRADE LINE
PI	POINT OF INTERSECTION
POC	POINT ON CURVE
POT	POINT ON TANGENT
PRC	POINT OF REVERSE CURVATURE
PROJ	PROJECT
PROP	PROPOSED
PSB	PLANTABLE SOIL BORROW
PT	POINT OF TANGENCY
PVC	POINT OF VERTICAL CURVATURE
PVCC	POINT OF VERTICAL COMPOUND CURVATURE
PVI	POINT OF VERTICAL INTERSECTION
PVRC	POINT OF VERTICAL REVERSE CURVATURE
PVT	POINT OF VERTICAL TANGENCY
PVMT	PAVEMENT
PWW	PAVED WATER WAY
R	RADIUS OF CURVATURE
R&D	REMOVE AND DISPOSE
RCP	REINFORCED CONCRETE PIPE
RD	ROAD
RDWY	ROADWAY
REM	REMOVE
RET	RETAIN
RET WALL	RETAINING WALL
ROW	RIGHT OF WAY
RR	RAILROAD
R&R	REMOVE AND RESET
R&S	REMOVE AND STACK
RT	RIGHT
SB	STONE BOUND
SHLD	SHOULDER
SMH	SEWER MANHOLE
ST	STREET
STA	STATION
SSD	STOPPING SIGHT DISTANCE
SHLO	STATE HIGHWAY LAYOUT LINE
SW	SIDEWALK
T	TANGENT DISTANCE OF CURVE/TRUCK %
TAN	TANGENT
TEMP	TEMPORARY
TC	TOP OF CURB
TOS	TOP OF SLOPE
TYP	TYPICAL
UP	UTILITY POLE
VAR	VARIES
VERT	VERTICAL
VC	VERTICAL CURVE
WG	WATER GATE
WIP	WROUGHT IRON PIPE
WM	WATER METER/WATER MAIN
X-SECT	CROSS SECTION

GPI Engineering Design Planning Construction Inspection
978.570.2999 GPINET.COM
Greenman-Pedersen, Inc.
181 Ballardvale Street, Suite 202
Wilmington, MA 01887

PREPARED FOR
CITY OF HAVERHILL
4 SUMMER STREET
HAVERHILL, MA 01830

REPLACEMENT OF BRANDY BROW ROAD CULVERT OVER EAST MEADOW RIVER
BRANDY BROW ROAD
HAVERHILL, MASSACHUSETTS

REVISIONS

NO.	REVISION	DATE

11/6/2025

DRAWN/DESIGN BY	CHECKED BY
NHG	GJH

LEGEND & ABBREVIATIONS

SCALE: N.T.S.

NEX-2300100.00

2300100.00_HD (LE).DWG 4/10/2024

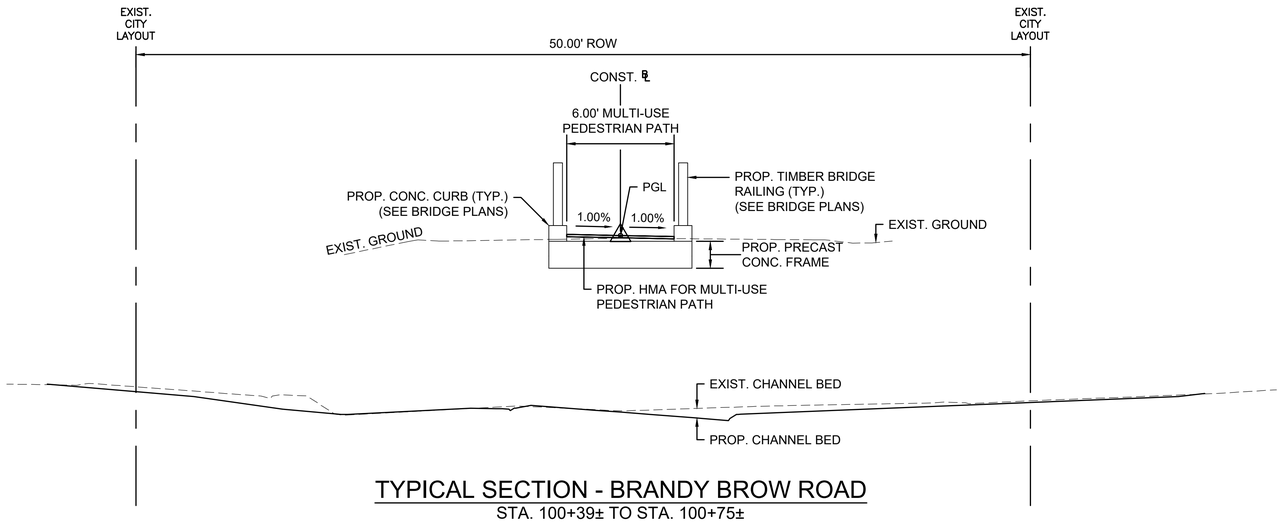

TYPICAL SECTION - BRANDY BROW ROAD

STA. 100+39± TO STA. 100+75±

SCALE: 1"=4'

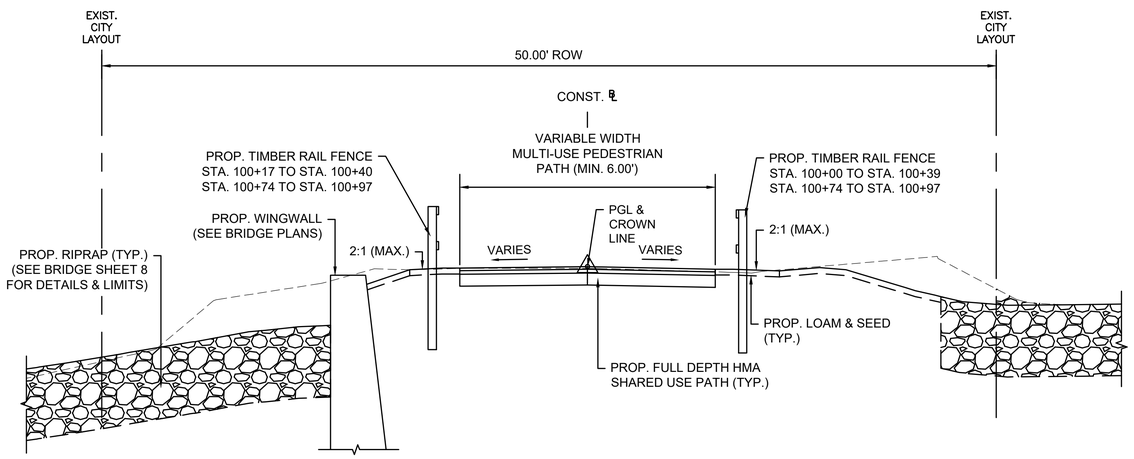

TYPICAL SECTION - BRANDY BROW ROAD

STA. 100+00 TO STA. 100+39±
STA. 100+75± TO STA. 101+14

SCALE: 1"=4'

PAVEMENT NOTES

FULL DEPTH HMA SHARED USE PATH

SURFACE COURSE: 1.5" SUPERPAVE SURFACE COURSE - 9.5 (SSC-9.5) OVER
2.5" SUPERPAVE SURFACE COURSE - 12.5 (SSC-12.5) OVER

SUBBASE: 8" GRAVEL BORROW TYPE B (OR SUITABLE EXISTING MATERIAL)

HMA FOR MULTI-USE PEDESTRIAN PATH

SURFACE COURSE: 1.5" SUPERPAVE BRIDGE SURFACE COURSE - 9.5 (SSC-B-9.5) OVER

PROTECTIVE COURSE: VARIABLE DEPTH (1" MIN. ± - 3" MAX. ±) SUPERPAVE BRIDGE PROTECTIVE COURSE - 9.5 (SPC-B-9.5)

GENERAL NOTES

1. ALL HMA SHALL BE IN ACCORDANCE WITH QUALITY ASSURANCE OF HMA AND SUPERPAVE SPECIFICATIONS. ASPHALT EMULSION FOR TACK COAT RS-1H SHALL BE APPLIED TO PAVEMENT LAYERS PRIOR TO PAVING FOR BONDED STRENGTH. HMA JOINT ADHESIVE SHALL BE IN ACCORDANCE WITH SECTION 450.49 HOT MIX ASPHALT JOINTS.
2. SUITABLE EXCAVATED MATERIAL FROM WITHIN THE RIGHT-OF-WAY SHALL BE USED ON SITE AS DIRECTED BY ENGINEER.

HOR. SCALE IN FEET
4 0 4 8
4 0 4 8
VER. SCALE IN FEET

GPI Engineering Design Planning Construction Inspection
978.570.2999 GPINET.COM
Greenman-Pedersen, Inc.
181 Ballardvale Street, Suite 202
Wilmington, MA 01887

PREPARED FOR
CITY OF HAVERHILL
4 SUMMER STREET
HAVERHILL, MA 01830

REPLACEMENT OF BRANDY BROW ROAD CULVERT OVER EAST MEADOW RIVER
BRANDY BROW ROAD
HAVERHILL, MASSACHUSETTS

REVISIONS

NO.	REVISION	DATE

11/6/2025

DRAWN/DESIGN BY	CHECKED BY
NHG/GBP	GJH

TYPICAL SECTIONS

SCALE: 1"=4'

NEX-2300100.00

2300100.00_HD (TYP).DWG 10/15/2024

BRANDY BROW ROAD CONSTRUCTION BASELINE DATA								
NUMBER	STARTING STATION	NORTHING	EASTING	CURVE DATA	LINE DATA	ENDING STATION	NORTHING	EASTING
L1	99+00.00	3126644.145	779329.982		S83°24'02"E 73.76'	99+73.76	3126635.668	779403.255
C1	99+73.76	3126635.668	779403.255	R=200.00' Δ=6°26'29" L=22.48' T=11.25'		99+96.25	3126631.835	779425.398
L2	99+96.25	3126631.835	779425.398		S76°57'33"E 203.75'	102+00.00	3126585.859	779623.897

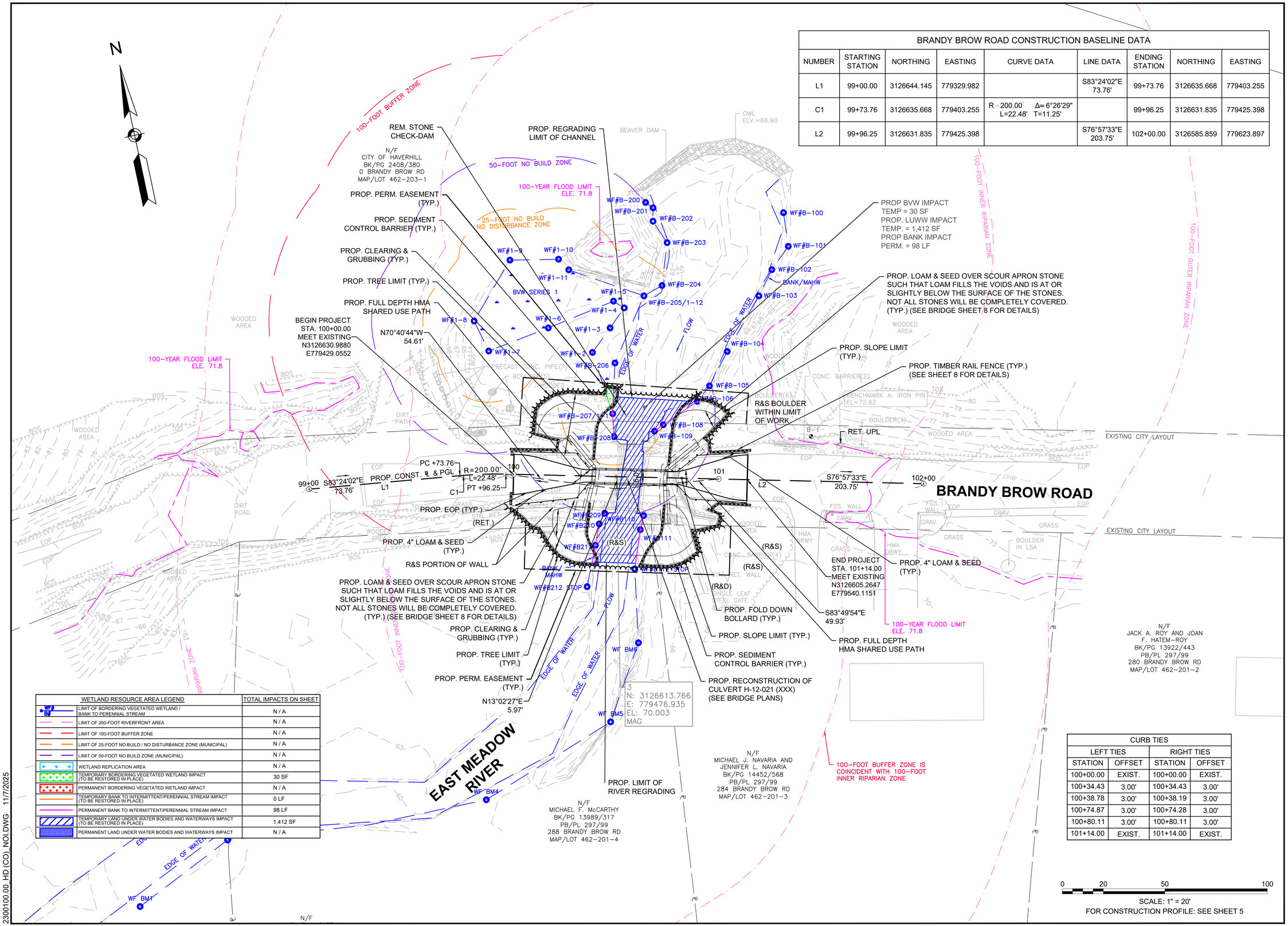

WETLAND RESOURCE AREA LEGEND		TOTAL IMPACTS ON SHEET
WF# B#	LIMIT OF BORDERING VEGETATED WETLAND / BANK TO PERENNIAL STREAM	N / A
	LIMIT OF 200-FOOT RIVERFRONT AREA	N / A
	LIMIT OF 100-FOOT BUFFER ZONE	N / A
	LIMIT OF 25-FOOT NO BUILD / NO DISTURBANCE ZONE (MUNICIPAL)	N / A
	LIMIT OF 50-FOOT NO BUILD ZONE (MUNICIPAL)	N / A
	WETLAND REPLICATION AREA	N / A
	TEMPORARY BORDERING VEGETATED WETLAND IMPACT (TO BE RESTORED IN PLACE)	30 SF
	PERMANENT BORDERING VEGETATED WETLAND IMPACT	N / A
	TEMPORARY BANK TO INTERMITTENT/PERENNIAL STREAM IMPACT (TO BE RESTORED IN PLACE)	0 LF
	PERMANENT BANK TO INTERMITTENT/PERENNIAL STREAM IMPACT	98 LF
	TEMPORARY LAND UNDER WATER BODIES AND WATERWAYS IMPACT (TO BE RESTORED IN PLACE)	1,412 SF
	PERMANENT LAND UNDER WATER BODIES AND WATERWAYS IMPACT	N / A

CURB TIES			
LEFT TIES		RIGHT TIES	
STATION	OFFSET	STATION	OFFSET
100+00.00	EXIST.	100+00.00	EXIST.
100+34.43	3.00'	100+34.43	3.00'
100+38.78	3.00'	100+38.19	3.00'
100+74.87	3.00'	100+74.28	3.00'
100+80.11	3.00'	100+80.11	3.00'
101+14.00	EXIST.	101+14.00	EXIST.

0 20 50 100

SCALE: 1" = 20'
FOR CONSTRUCTION PROFILE: SEE SHEET 5

GPI Engineering Design Planning Construction Inspection
978.570.2999 GPINET.COM
Greenman-Pedersen, Inc.
181 Ballardvale Street, Suite 202
Wilmington, MA 01887

PREPARED FOR
CITY OF HAVERHILL
4 SUMMER STREET
HAVERHILL, MA 01830

REPLACEMENT OF BRANDY BROW ROAD CULVERT OVER EAST MEADOW RIVER
BRANDY BROW ROAD HAVERHILL, MASSACHUSETTS

REVISIONS

NO.	REVISION	DATE

11/6/2025

DRAWN/DESIGN BY	CHECKED BY
NHG/GBP	GJH

CONSTRUCTION PLAN

SCALE: 1"=20'

NEX-2300100.00

2300100.00_HD (CO)_NOI.DWG 11/7/2025

BRANDY BROW ROAD

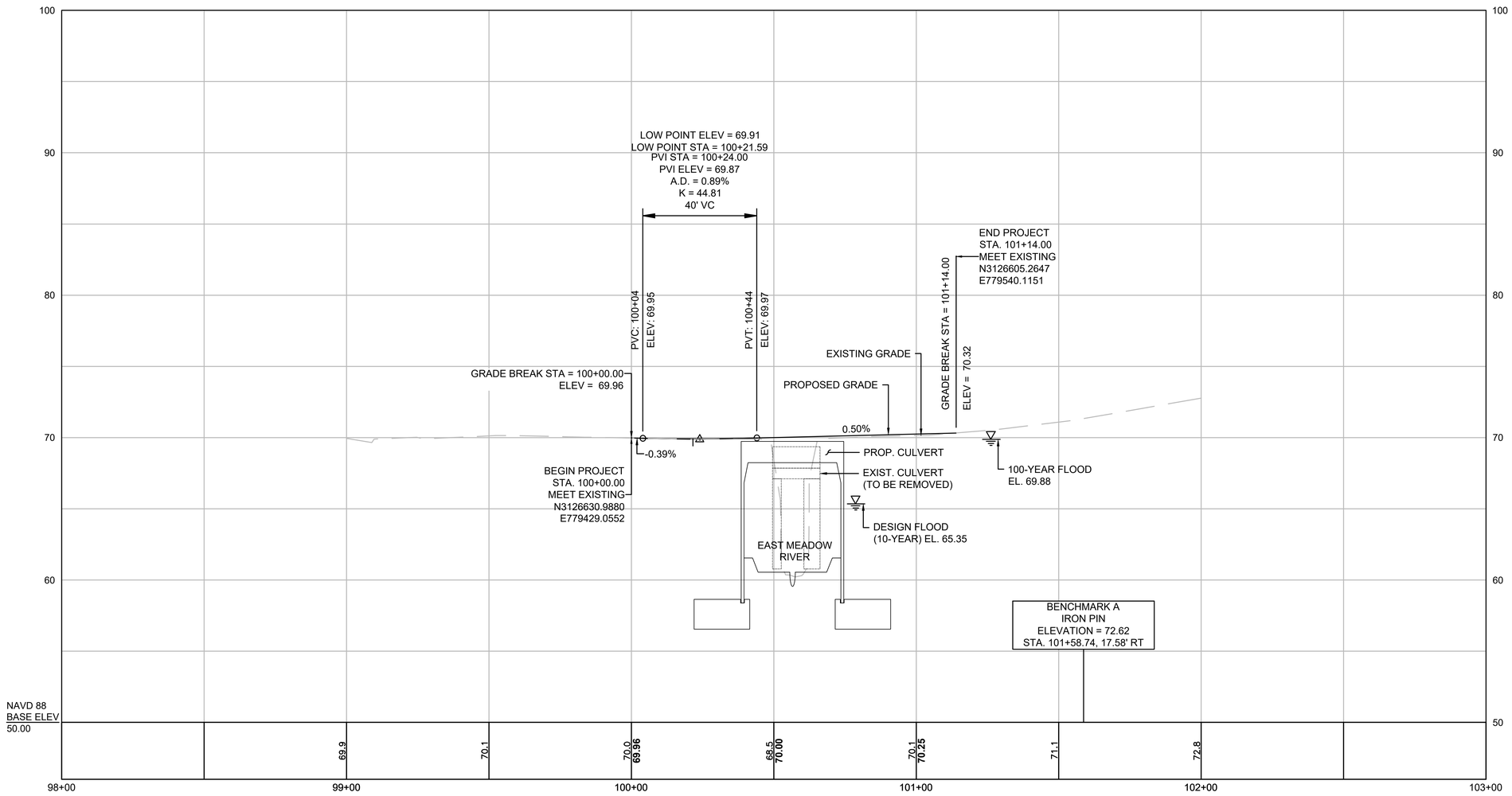

HOR. SCALE IN FEET
20 0 20 40
4 0 4 8
VER. SCALE IN FEET

FOR CONSTRUCTION PLAN: SEE SHEET 4

GPI Engineering Design Planning Construction Inspection
978.570.2999 GPINET.COM
Greenman-Pedersen, Inc.
181 Ballardvale Street, Suite 202
Wilmington, MA 01887

PREPARED FOR
CITY OF HAVERHILL
4 SUMMER STREET
HAVERHILL, MA 01830

REPLACEMENT OF BRANDY BROW ROAD CULVERT OVER EAST MEADOW RIVER

BRANDY BROW ROAD
HAVERHILL, MASSACHUSETTS

REVISIONS

NO.	REVISION	DATE

11/6/2025

DRAWN/DESIGN BY	CHECKED BY
GBP/NHG	GJH

CONSTRUCTION PROFILE

SCALE: AS NOTED

NEX-2300100.00

2300100.00_HD (PR).DWG 10/15/2024

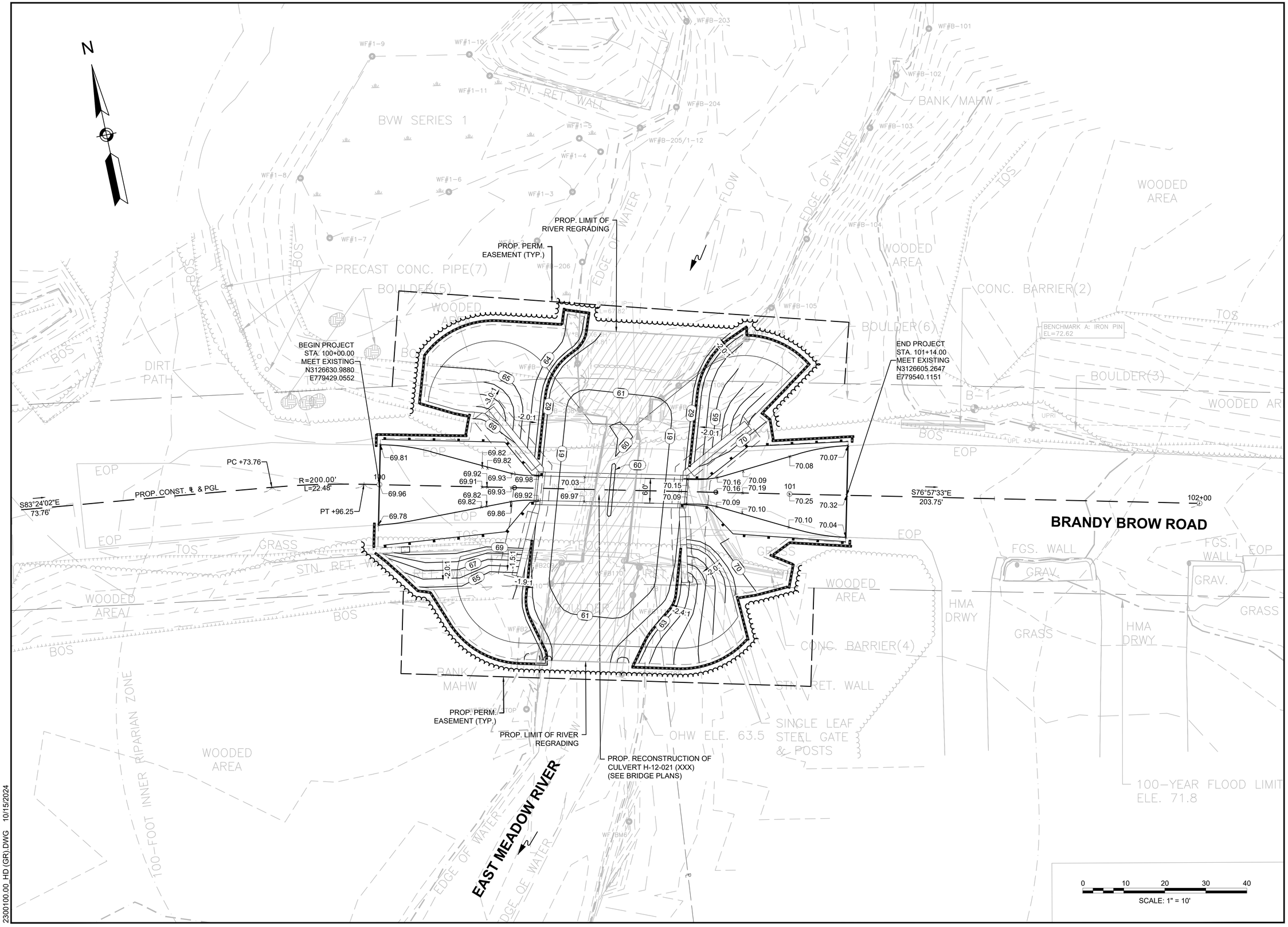

2300100.00_HD (GR).DWG 10/15/2024

GPI Engineering Design Planning Construction Inspection
978.570.2999 GPINET.COM
Greenman-Pedersen, Inc.
181 Ballardvale Street, Suite 202
Wilmington, MA 01887

PREPARED FOR
CITY OF HAVERHILL
4 SUMMER STREET
HAVERHILL, MA 01830

REPLACEMENT OF BRANDY BROW ROAD CULVERT OVER EAST MEADOW RIVER

BRANDY BROW ROAD
HAVERHILL, MASSACHUSETTS

REVISIONS

NO.	REVISION	DATE

11/6/2025

DRAWN/DESIGN BY	CHECKED BY
GBP	GJH

GRADING PLAN

SCALE: 1"=10'

NEX-2300100.00

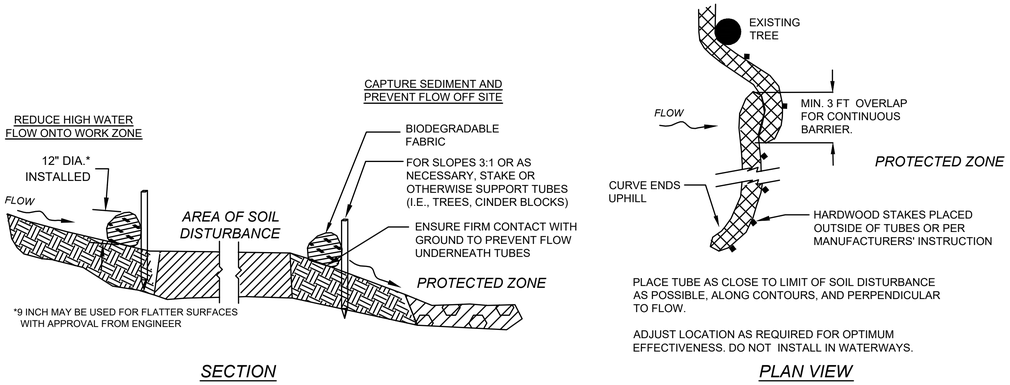

SEDIMENT BARRIER - COMPOST FILTER TUBE

NOT TO SCALE

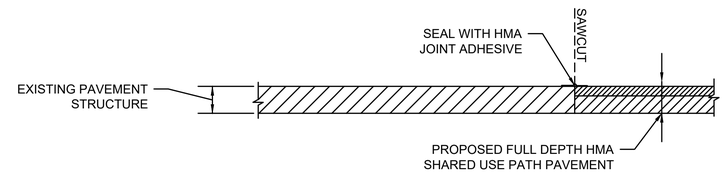

PAVEMENT TRANSITION DETAIL

NOT TO SCALE

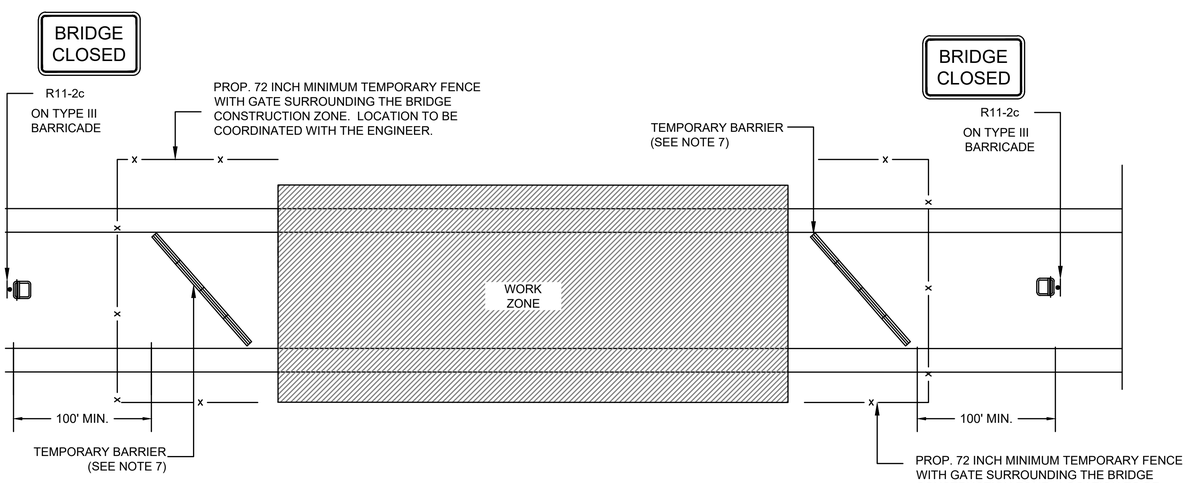

BRIDGE CLOSURE DETAIL

NOT TO SCALE

TRAFFIC MANAGEMENT LEGEND

- WORK AREA
- PORTABLE TYPE III BARRICADE (4' WIDE, MIN.)
- TEMPORARY PRECAST CONCRETE BARRIER WITH TEMPORARY FENCE & WHITE REFLECTORS

NOTES:

1. ALL TRAFFIC MANAGEMENT AND WORK ZONE TRAFFIC CONTROL MEASURES SHALL CONFORM TO THE CURRENT MANUAL ON UNIFORM TRAFFIC CONTROL DEVICES (M.U.T.C.D.), MASSDOT - HIGHWAY DIVISION'S "STANDARD DETAILS AND DRAWINGS FOR THE DEVELOPMENT OF TRAFFIC MANAGEMENT PLANS", THE STANDARD SPECIFICATIONS, AND THE FOLLOWING NOTES.
2. THE TEMPORARY TRAFFIC CONTROL PLANS CONTAINED HEREIN ARE GIVEN AS A GUIDE FOR TYPICAL WORK ZONE TRAFFIC CONTROL APPLICATIONS FOR THE TYPES OF WORK ANTICIPATED FOR THIS PROJECT. THEY ARE NOT INTENDED TO COVER ALL POSSIBLE CONSTRUCTION OPERATIONS WHICH THE CONTRACTOR MAY CHOOSE TO EMPLOY. WORK ZONE TRAFFIC CONTROL FOR OTHER CONSTRUCTION OPERATIONS OR OTHER TRAFFIC SITUATIONS IF APPLICABLE SHALL BE IN ACCORDANCE WITH THE REFERENCES LISTED IN NOTE NO. 1 AND AS APPROVED OR DIRECTED BY THE ENGINEER.
3. AFTER EACH WORKING DAY, TRAFFIC CONTROL DEVICES THAT ARE NOT REQUIRED SHALL BE MOVED OFF THE ROADWAY OR FULL DEPTH CONSTRUCTION AREA AND PLACED SO AS NOT TO IMPEDE PEDESTRIAN AREAS, ABUTTER ACCESS OR CAUSE CONFUSION TO MOTORISTS. IN CERTAIN CIRCUMSTANCES, AND ONLY WITH THE APPROVAL OF THE CITY AND THE ENGINEER, LANE RESTRICTIONS MAY REMAIN OVERNIGHT.
4. PLACE ALL CONSTRUCTION SIGNING AND TRAFFIC CONTROL DEVICES FOR EACH PHASE PRIOR TO COMMENCEMENT OF CONSTRUCTION.
5. DISTANCES SHOWN ON THE TEMPORARY TRAFFIC CONTROL PLANS ARE A GUIDE ONLY, AND MAY BE ADJUSTED IN THE FIELD BY THE ENGINEER.
6. CONTRACTOR SHALL REMOVE SEGMENTS OF TEMPORARY CONCRETE BARRIER AS NECESSARY TO GAIN ACCESS TO THE SITE. CONTRACTOR SHALL REPLACE THE BARRIER AT THE END OF EACH WORKING DAY TO SECURE THE SITE. THE COST ASSOCIATED WITH REMOVING AND RESETTING THE TEMPORARY CONCRETE BARRIER SHALL BE CONSIDERED INCIDENTAL TO ITEM 853.2.
7. PROPOSED TEMPORARY BARRIER SHALL CONFORM TO MASH TEST LEVEL 2.

GPI Engineering Design Planning Construction Inspection
978.570.2999 GPINET.COM
Greenman-Pedersen, Inc.
181 Ballardvale Street, Suite 202
Wilmington, MA 01887

PREPARED FOR
CITY OF HAVERHILL
4 SUMMER STREET
HAVERHILL, MA 01830

REPLACEMENT OF BRANDY BROW ROAD CULVERT OVER EAST MEADOW RIVER
BRANDY BROW ROAD
HAVERHILL, MASSACHUSETTS

REVISIONS

NO.	REVISION	DATE

11/6/2025

DRAWN/DESIGN BY	CHECKED BY
NHG	GJH

CONSTRUCTION DETAILS

SCALE: N.T.S.

NEX-2300100.00

2300100.00_HD (CD).DWG 10/15/2024

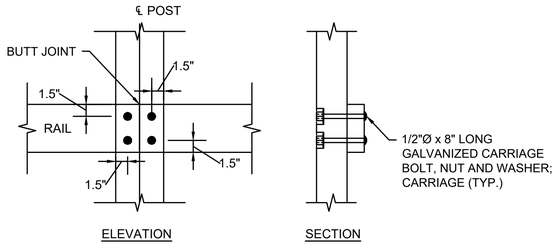

NOTES:
1. CARRIAGE BOLT SHALL BE CUT FLUSH WITH BACK OF POST.
2. NUTS AND WASHERS SHALL BE COUNTERSUNK.
3. PEEN BOLTS FOR VANDAL RESISTANCE.

BUTT JOINT CONNECTION

NOT TO SCALE

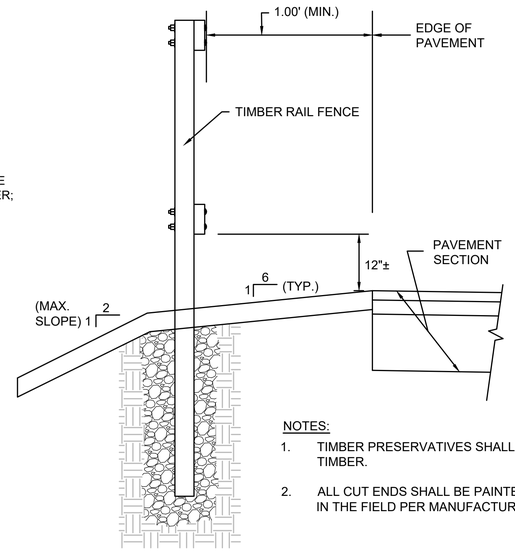

NOTES:
1. TIMBER PRESERVATIVES SHALL BE USED ON ALL WOOD TIMBER.
2. ALL CUT ENDS SHALL BE PAINTED WITH PRESERVATIVE IN THE FIELD PER MANUFACTURERS DIRECTION.

SECTION A-A

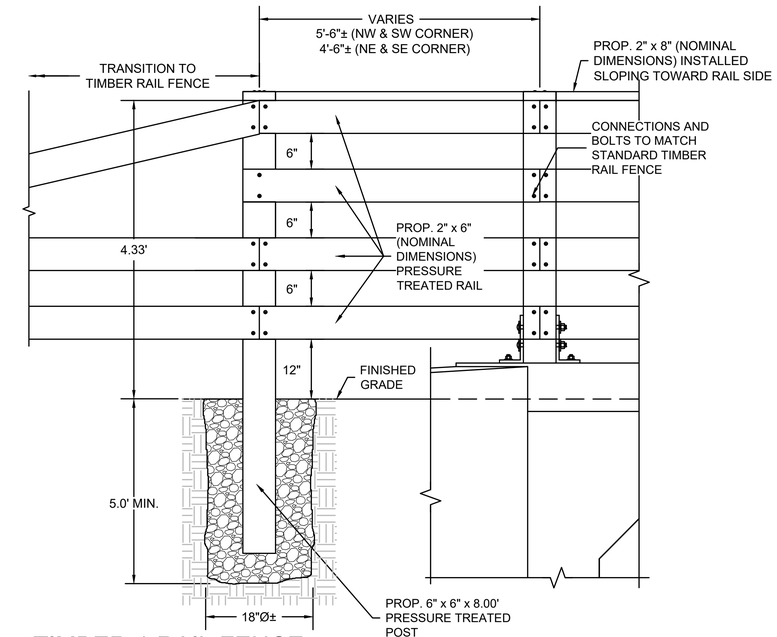

TIMBER 4-RAIL FENCE

NOT TO SCALE

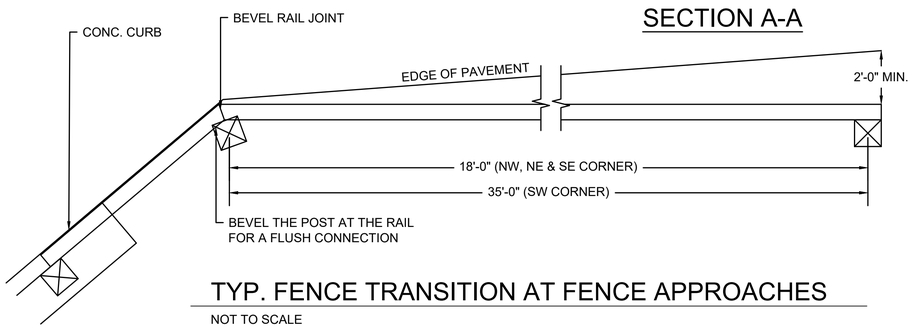

TYP. FENCE TRANSITION AT FENCE APPROACHES

NOT TO SCALE

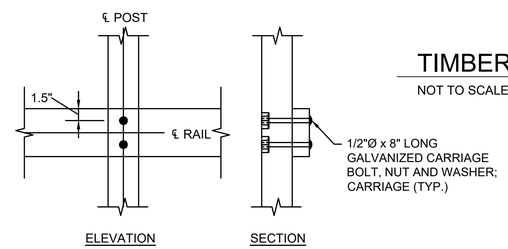

NOTES:
1. CARRIAGE BOLT SHALL BE CUT FLUSH WITH BACK OF POST.
2. NUTS AND WASHERS SHALL BE COUNTERSUNK.
3. PEEN BOLTS FOR VANDAL RESISTANCE.

INTERMEDIATE CONNECTION

NOT TO SCALE

NOTE:
1. ALL POSTS SHALL BE MACHINE DRIVEN UNLESS DAMAGED IN THE ERECTION PROCESS.

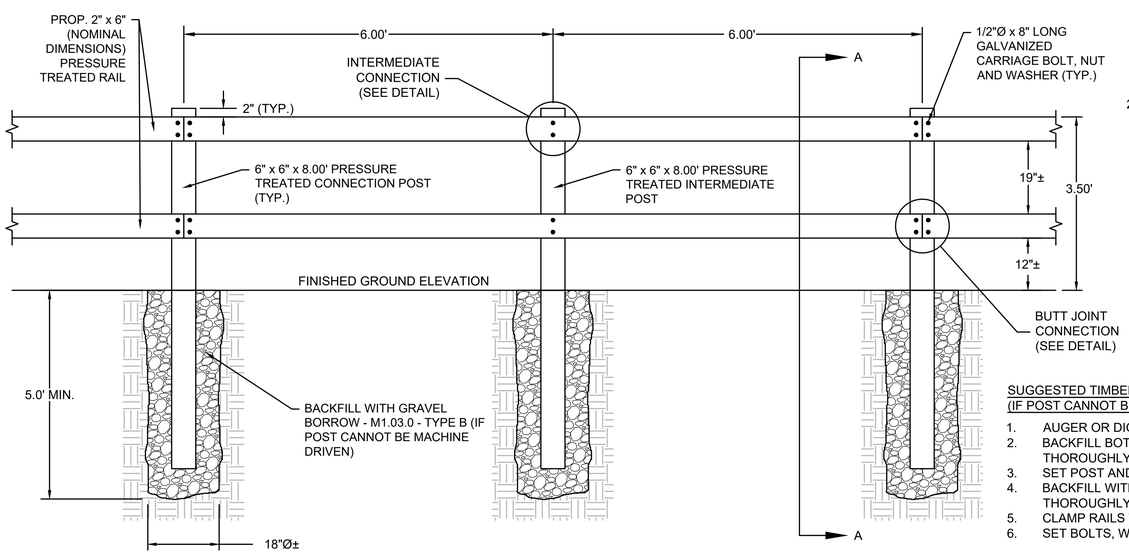

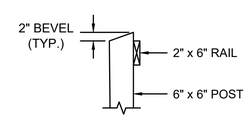

TYPICAL 6"x6" POST TOP

SUGGESTED TIMBER RAIL FENCE CONSTRUCTION SEQUENCE (IF POST CANNOT BE MACHINE DRIVEN)
1. AUGER OR DIG POST HOLE TO REQUIRED DIMENSIONS.
2. BACKFILL BOTTOM 6"± OF HOLE WITH GRAVEL AND COMPACT THOROUGHLY.
3. SET POST AND HOLD PLUMB DURING BACKFILLING.
4. BACKFILL WITH GRAVEL IN 12" LIFTS. COMPACT EACH LIFT THOROUGHLY.
5. CLAMP RAILS TO POSTS AND FIELD DRILL BOLT HOLES.
6. SET BOLTS, WASHERS AND NUTS.

TIMBER RAIL FENCE

NOT TO SCALE

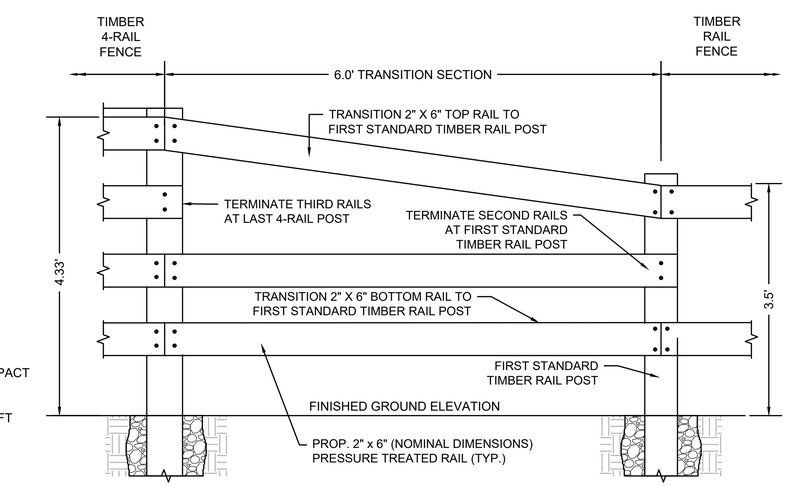

TIMBER RAIL FENCE TRANSITION TO TIMBER 4-RAIL FENCE

NOT TO SCALE

2300100.00_HD (CD).DWG 10/15/2024

GPI Engineering Design Planning Construction Inspection
978.570.2999 GPINET.COM
Greenman-Pedersen, Inc.
181 Ballardvale Street, Suite 202
Wilmington, MA 01887

PREPARED FOR
CITY OF HAVERHILL
4 SUMMER STREET
HAVERHILL, MA 01830

REPLACEMENT OF BRANDY BROW ROAD CULVERT OVER EAST MEADOW RIVER
BRANDY BROW ROAD
HAVERHILL, MASSACHUSETTS

REVISIONS

NO.	REVISION	DATE

11/6/2025

DRAWN/DESIGN BY	CHECKED BY
NHG	GJH

CONSTRUCTION DETAILS

SCALE: N.T.S.

NEX-2300100.00

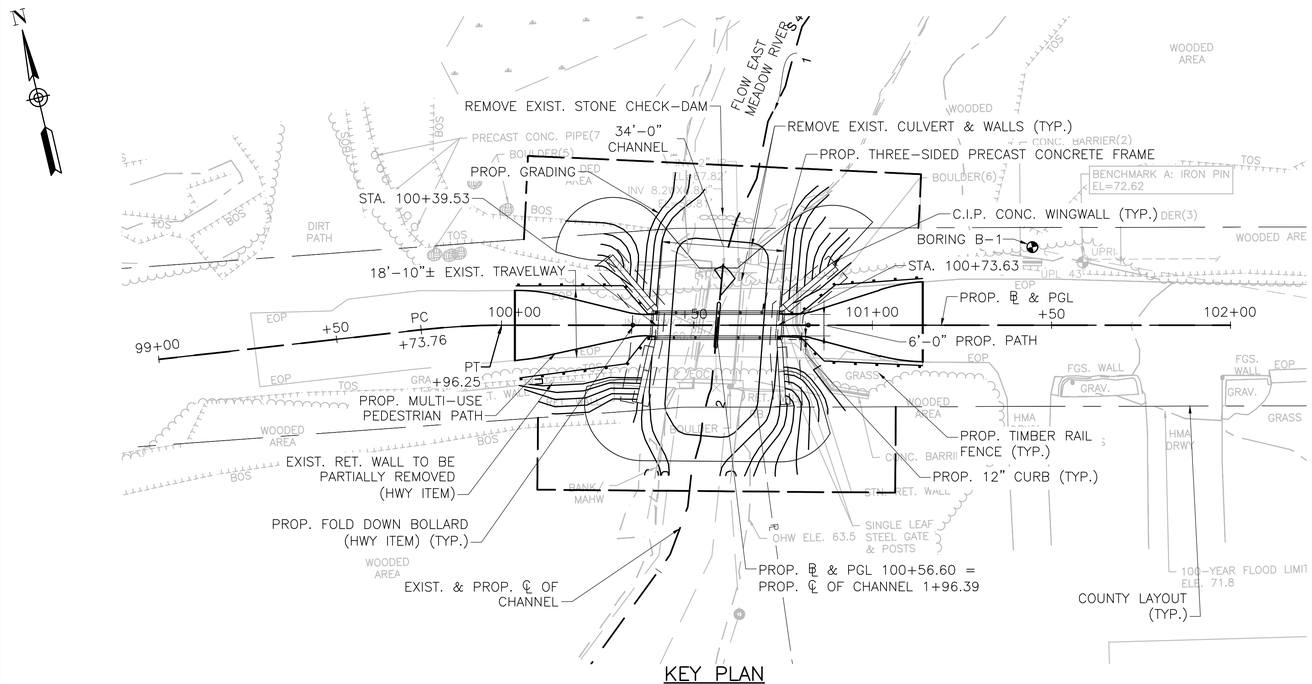

KEY PLAN
SCALE: 1" = 20'-0"

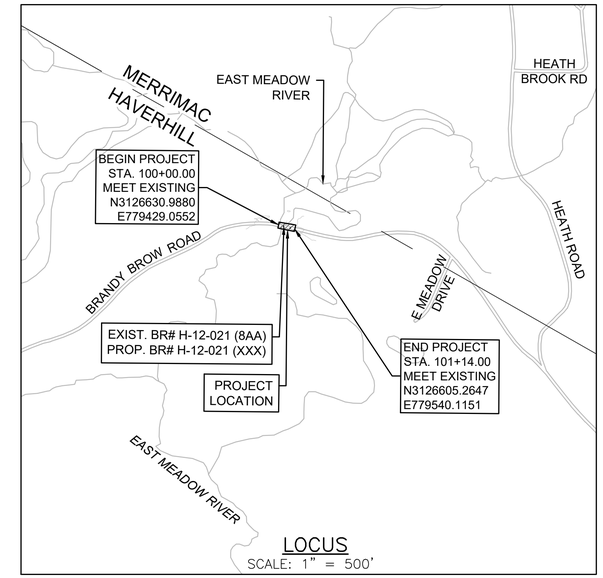

LOCUS
SCALE: 1" = 500'

INDEX OF BRIDGE SHEETS:

1. KEY PLAN, LOCUS MAP, & PROFILES
2. GENERAL NOTES & ESTIMATED QUANTITIES
3. BORING LOG
4. ELEVATIONS & CROSS SECTIONS
5. PLAN & FRAMING PLAN
6. EXCAVATION PLAN & TIMBER RAIL FENCE DETAILS
7. FOOTING PLAN & MISC. DETAILS
8. LONGITUDINAL & WINGWALL SECTIONS
9. SCOUR PROTECTION PLAN & CHANNEL DETAILS

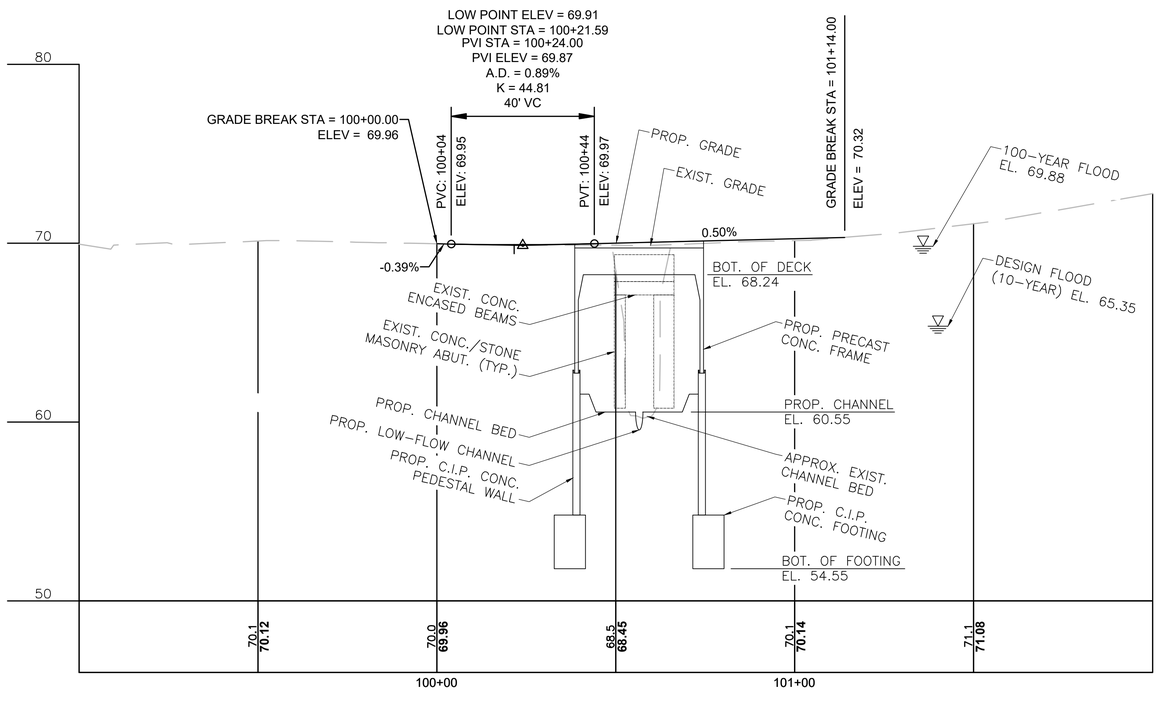

PROFILE – ALONG CONST. ℄ & P.G.L. BRANDY BROW ROAD
SCALE: 1" = 20'-0" HORZ.
¼" = 1'-0" VERT.

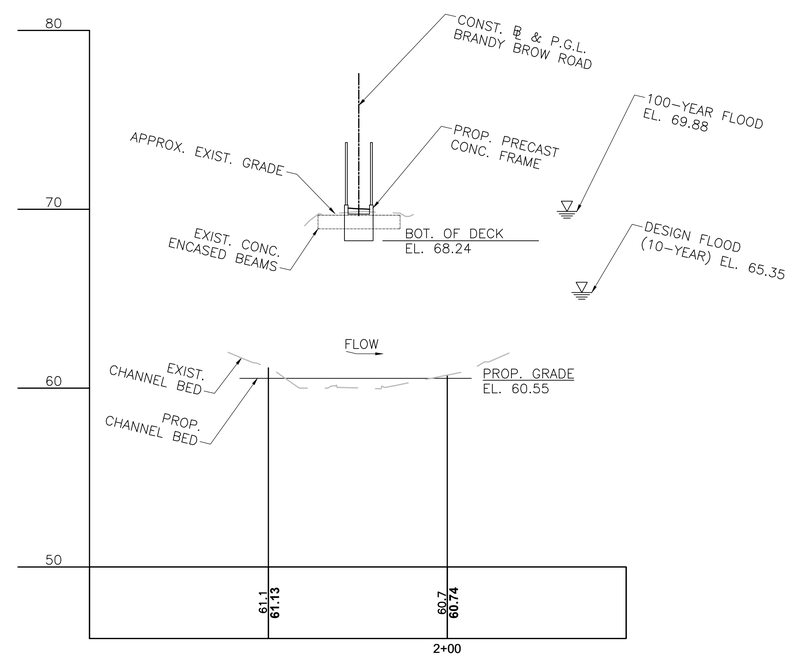

PROFILE – ALONG ℄ EAST MEADOW RIVER
SCALE: 1" = 20'-0" HORZ.
¼" = 1'-0" VERT.

GPI Greenman-Pedersen, Inc.
Engineering & Construction Services
181 Ballardvale Street, Suite 202, Wilmington, MA 01887
Tel: (978) 570-2999 Fax: (978) 658-3044
http://www.gpinet.com

PREPARED FOR
CITY OF HAVERHILL
4 SUMMER STREET
HAVERHILL, MA 01830

REPLACEMENT OF BRANDY BROW ROAD CULVERT OVER EAST MEADOW RIVER
BRANDY BROW ROAD
HAVERHILL, MASSACHUSETTS

REVISIONS

NO.	REVISION	DATE

11/6/2025

DRAWN/DESIGN BY	CHECKED BY
CMP	RWM

KEY PLAN, LOCUS MAP, & PROFILES

SCALE: AS NOTED

NEX2300100.00

BR01-KEY PLAN.DWG 11/6/2025

GENERAL NOTES

DESIGN:
IN ACCORDANCE WITH THE 2020 SPECIFICATIONS OF THE AMERICAN ASSOCIATION OF STATE HIGHWAY AND TRANSPORTATION OFFICIALS (AASHTO) LRFD BRIDGE DESIGN SPECIFICATIONS, 9TH EDITION WITH CURRENT INTERIM SPECIFICATIONS THROUGH 2024, AND THE 2009 AMERICAN ASSOCIATION OF STATE HIGHWAY AND TRANSPORTATION OFFICIALS LRFD GUIDE SPECIFICATIONS FOR THE DESIGN OF PEDESTRIAN BRIDGES.

EXISTING BRIDGE PLANS:
THERE ARE NO KNOWN EXISTING BRIDGE PLANS. EXISTING BRIDGE INFORMATION CONTAINED IN THESE DRAWINGS IS NOT GUARANTEED. THE CONTRACTOR IS RESPONSIBLE TO COMPLETE HIS OWN INVESTIGATION OF THE EXISTING STRUCTURE PRIOR TO THE COMMENCEMENT OF WORK.

MASSDOT BENCH MARK:
MAG NAIL IN UTILITY POLE #43
N3126612.2922 E779589.6703
STA. 101+58.82 17.66' LT
EL. 72.62

REFER TO HIGHWAY PLANS FOR BENCHMARK LOCATIONS

ELEVATIONS:
ELEVATIONS ARE BASED ON THE NORTH AMERICAN VERTICAL DATUM (NAVD) OF 1988.

DATE:
TO BE PLACED ON THE NORTH AND SOUTH OUTSIDE FACES OF THE CULVERT TOP SLAB. A SHEET SHOWING SIZE AND CHARACTER OF NUMERALS WILL BE FURNISHED. THE DATE USED SHALL BE THE LATEST YEAR OF THE CONTRACT COMPLETION AS OF THE DATE THE CULVERT IS CAST. THE SAME DATE SHALL BE USED FOR BOTH ENDS OF THE CULVERT.

MASSDOT SURVEY NOTEBOOKS:
COPIES OF ELECTRONIC SURVEY FILES MAY BE OBTAINED FROM GREENMAN-PEDERSEN, INC.

SCALES:
SCALES NOTED ON THE PLANS ARE NOT APPLICABLE TO REDUCED SIZED PRINTS. DIVIDE SCALES BY 2 FOR HALF-SIZE PRINTS (A3).

FOUNDATIONS:
FOUNDATIONS MAY BE ALTERED, IF NECESSARY, TO SUIT CONDITIONS ENCOUNTERED DURING CONSTRUCTION, WITH THE APPROVAL OF THE ENGINEER.

UNSUITABLE MATERIAL:
ALL UNSUITABLE MATERIAL SHALL BE REMOVED WITHIN THE LIMITS OF THE FOUNDATIONS OF THE STRUCTURE, AS DIRECTED BY THE ENGINEER.

SEISMIC GROUND SHAKING HAZARD:
DESIGN RETURN PERIOD: 1000 YEARS

DESIGN SPECTRA:

$A_s = 0.190$
$S_{DS} = 0.315$
$S_{D1} = 0.091$

SITE CLASS = D

SEISMIC DESIGN CATEGORY (SDC) = A

REINFORCEMENT:
REINFORCING STEEL SHALL CONFORM TO THE REQUIREMENTS OF AASHTO M 31 GRADE 60 (EPOXY COATED). UNLESS OTHERWISE NOTED ON THE CONSTRUCTION DRAWINGS, ALL BARS SHALL BE LAPPED AS FOLLOWS:

MODIFICATION CONDITION	#4 BARS	#5 BARS
1. NONE	21"	26"
2. 12" OF CONCRETE BELOW BAR	29"	36"
3. COATED BARS, COVER < 3db, OR CLEAR SPACING < 6db	31"	39"
4. COATED BARS, ALL OTHER CASES	25"	31"
5. CONDITION 2. AND 3.	35"	44"
6. CONDITION 2. AND 4.	34"	43"

IF THE ABOVE BARS ARE SPACED 6" OR MORE ON CENTER, THE LAP LENGTH SHALL BE 80% OF THE LAP LENGTH GIVEN ABOVE. ALL OTHER BARS SHALL BE LAPPED AS SHOWN ON THE CONSTRUCTION DRAWINGS.

CONCRETE MIXES:

(1)	(2)	(3)	TO BE USED IN CONSTRUCTION OF:
5000	$\frac{3}{4}$	685 HP	FRAME FOOTINGS, WINGWALLS, AND WINGWALL FOOTINGS

(1) 28 DAY COMPRESSIVE STRENGTH (PSI)
(2) MAXIMUM AGGREGATE SIZE (INCH)
(3) CEMENTITIOUS CONTENT (POUNDS/C.Y.)

EXISTING FOUNDATIONS:
LIMITS OF EXISTING FOUNDATIONS SHOWN ON THESE PLANS ARE UNKNOWN AND MAY EXIST BEYOND THE LIMITS SHOWN. THE CONTRACTOR SHALL BE RESPONSIBLE FOR PERFORMING THEIR OWN SITE INVESTIGATION PRIOR TO COMMENCEMENT OF WORK.

PRECAST FRAME CULVERT:
THE DIMENSIONS PROVIDED ARE SHOWN TO ESTABLISH THE SIZE OF THE PROPOSED OPENING. THE WIDTH AND THICKNESS OF THE PROPOSED UNITS MAY VARY DEPENDING UPON THE MANUFACTURER'S SPECIFICATIONS, PROVIDED THAT THE OPENING SIZE AND BURIED DEPTH ARE MAINTAINED.

THE FRAME OPENING SHALL BE SKEWED AS SHOWN ON THE PLANS. ANY MODIFICATIONS TO THE GEOMETRY WILL REQUIRE APPROVAL FROM THE ENGINEER PRIOR TO FABRICATION.

THE FACTORED BEARING PRESSURE PER AASHTO LRFD BRIDGE DESIGN SPECIFICATIONS STRENGTH I LOAD COMBINATION SHALL BE DETERMINED BY THE CONTRACTOR AND MEET THE REQUIREMENTS IN THE GEOTECHNICAL REPORT.

THE CONTRACTOR SHALL SUBMIT FOR APPROVAL A COMPLETE DESIGN OF THE PROPOSED THREE-SIDED PRECAST CONCRETE FRAME UNITS BASED ON THE ASSUMED GEOMETRY SHOWN. THE FACTORED BEARING RESISTANCE IS 6.9 KSF WHICH IS A PRODUCT OF THE NOMINAL BEARING RESISTANCE AND A RESISTANCE FACTOR OF 0.45, AS OUTLINED IN THE GEOTECHNICAL REPORT.

THE MINIMUM 28 DAY CONCRETE COMPRESSIVE STRENGTH FOR THE PROPOSED THREE-SIDED PRECAST CONCRETE FRAME UNITS SHALL BE HP 5000 PSI. A MASSDOT PRE-APPROVED CONCRETE MIX SHALL BE USED.

ALL SHOP DRAWINGS AND DESIGN CALCULATIONS SHALL BE STAMPED BY A PROFESSIONAL ENGINEER REGISTERED IN THE COMMONWEALTH OF MASSACHUSETTS.

REFER TO ITEM 995.01 OF THE SPECIAL PROVISIONS FOR FURTHER REQUIREMENTS AND CLARIFICATIONS.

HYDRAULIC DESIGN DATA:

DRAINAGE AREA:	3.63 SQUARE MILES
DESIGN FLOOD DISCHARGE:	869 CUBIC FEET PER SECOND
DESIGN FLOOD FREQUENCY:	10 YEARS
DESIGN FLOOD ELEVATION:	65.35 FEET, NAVD1988
DESIGN FLOOD VELOCITY:	7.09 FEET PER SECOND
BASE (100 YEAR) FLOOD DATA	
BASE FLOOD DISCHARGE:	2,366 CUBIC FEET PER SECOND
BASE FLOOD ELEVATION:	69.88 FEET, NAVD 1988
DESIGN AND CHECK SCOUR DATA	
DESIGN SCOUR FLOOD EVENT RETURN FREQUENCY:	25 YEARS
CHECK SCOUR FLOOD EVENT RETURN FREQUENCY:	50 YEARS
FLOOD OF RECORD	
DISCHARGE:	UNKNOWN
FREQUENCY:	UNKNOWN
MAXIMUM ELEVATION:	UNKNOWN
DATE:	UNKNOWN
HISTORY OF ICE FLOES:	NONE DOCUMENTED IN NBIS DATABASE
EVIDENCE OF SCOUR OR EROSION:	NONE OBSERVED

TEMPORARY WATER CONTROL DESIGN DATA **	
DESIGN FLOOD DISCHARGE (C.F.S.)	212
DESIGN FLOOD FREQUENCY (YEARS)	2
DESIGN FLOOD VELOCITY (F.P.S.)	3.17
DESIGN FLOOD ELEVATION (FEET, NAVD)	64.79

** TEMPORARY WATER CONTROL DESIGN DATA CONSIDERS A SINGLE 6' DIA. HDPE PIPE. 2-YEAR FLOOD DESIGN DATA SHALL BE CONSIDERED FOR TEMPORARY WATER CONTROL IN PLACE FOR ONE YEAR OR LESS. SEE HYDRAULIC REPORT FOR ADDITIONAL INFORMATION.

ESTIMATED QUANTITIES
(NOT GUARANTEED)

ITEM DESCRIPTION	QUANTITY	UNIT	ITEM
DEMOLITION OF SUPERSTRUCTURE OF BRIDGE NO. H-12-021 (8AA)	1	LS	114.1
EARTH EXCAVATION	380	CY	120.
REINFORCED CONCRETE EXCAVATION	10	CY	127.1
BRIDGE EXCAVATION	500	CY	140.
CHANNEL EXCAVATION	465	CY	143.
CLASS B ROCK EXCAVATION	145	CY	144.
GRAVEL BORROW FOR BACKFILLING STRUCTURES AND PIPES	225	CY	151.2
CRUSHED STONE	225	TON	156.
RIPRAP WITH GRAVEL PACKED VOIDS	1040	CY	983.201
NATURAL STREAMBED MATERIAL REMOVED AND RE-LAID	100	CY	983.35
CONTROL OF WATER - STRUCTURE NO. H-12-021 (DOQ)	1	LS	991.1
BRIDGE STRUCTURE, BRIDGE NO. H-12-021 (DOQ)	1	LS	995.01

GPI Greenman-Pedersen, Inc.
Engineering & Construction Services
181 Ballardvale Street, Suite 202, Wilmington, MA 01887
Tel: (978) 570-2999 Fax: (978) 658-3044
http://www.gpinet.com

PREPARED FOR
CITY OF HAVERHILL
4 SUMMER STREET
HAVERHILL, MA 01830

REPLACEMENT OF BRANDY BROW ROAD CULVERT OVER EAST MEADOW RIVER
BRANDY BROW ROAD
HAVERHILL, MASSACHUSETTS

REVISIONS

NO.	REVISION	DATE

11/6/2025

DRAWN/DESIGN BY	CHECKED BY
CMP	RWM

GENERAL NOTES & ESTIMATED QUANTITIES

SCALE: AS NOTED

NEX2300100.00

BR02-GENERAL NOTES.DWG 11/5/2025

BORING B–1

BORING INFORMATION

LOCATION: See Site Plan
GROUND SURFACE EL. (ft): ~70
VERTICAL DATUM: Project Datum
TOTAL DEPTH (ft): 51.0
LOGGED BY: A. Han
DATE START/END: 1/23/2024 - 1/23/2024
DRILLING COMPANY: Northern Drill Service, Inc.
DRILLER NAME: T. Tucker
RIG TYPE: Mobile B-57

BORING
B-1
PAGE 1 of 2

DRILLING INFORMATION

HAMMER TYPE: Automatic
AUGER I.D./O.D.: NA / NA
DRILLING METHOD: Drive and Wash
WATER LEVEL DEPTHS (ft): ▽ 8.6 1/23/2024 11:45 am
CASING I.D./O.D.: 4 inch/ 4.25 inch
DRILL ROD O.D.: NM
CORE BARREL TYPE:
CORE BARREL I.D./O.D. NA / NA

ABBREVIATIONS:
Pen. = Penetration Length
Rec. = Recovery Length
RQD = Rock Quality Designation
= Length of Sound Cores>4 in / Pen.,%
WOR = Weight of Rods
WOH = Weight of Hammer
S = Split Spoon Sample
C = Core Sample
U = Undisturbed Sample
SC = Sonic Core
DP = Direct Push Sample
HSA = Hollow-Stem Auger
Qp = Pocket Penetrometer Strength
Sv = Pocket Torvane Shear Strength
LL = Liquid Limit
PI = Plasticity Index
PID = Photoionization Detector
I.D./O.D. = Inside Diameter/Outside Diameter
NA, NM = Not Applicable, Not Measured
Blows per 6 in.: 140-lb hammer falling 30 inches to drive a 2-inch-O.D. split spoon sampler.

Elev. (ft)	Depth (ft)	Sample No.	Depth (ft)	Pen./ Rec. (in)	Blows per 6 in. or RQD	Drilling Remarks/ Field Test Data	Layer Name	Soil and Rock Description
70		S1	0 to 2	24/20	60-73-26-27	Drove casing and rollerbit to 4'.	GRAVEL	S1 (0"-4"): Asphalt. S1 (4"-20"): Moist, very dense, brown, FINE TO COARSE GRAVEL, some fine to coarse sand, trace inorganic silt.
	5	S2	2 to 4	24/12	20-19-14-11		SAND	S2: Moist, dense, brown, FINE TO COARSE SAND, some fine to coarse gravel, trace inorganic silt.
65		S3	4 to 6	24/10	8-7-6-4			S3: Moist, medium dense, orange, FINE TO COARSE SAND, some fine to coarse gravel, trace inorganic silt.
		S4	6 to 8	24/11	4-3-2-5			S4: Moist, loose, orange, FINE TO COARSE SAND, some fine to coarse gravel, trace inorganic silt.
60	10	S5	8 to 10	24/9	6-8-10-8	Drove casing to 10'.	GRAVEL	S5: Wet, medium dense, orange, FINE TO COARSE GRAVEL, some fine to coarse sand.
		S6	10 to 12	24/9	6-9-12-12			S6: Wet, medium dense, brown, FINE TO COARSE GRAVEL, some fine to coarse sand, trace inorganic silt.
		S7	12 to 14	24/13	16-7-9-9			S7: Moist, medium dense, brown, FINE TO COARSE GRAVEL, some fine to coarse sand, trace inorganic silt.
55	15	S8	14 to 16	24/9	7-12-9-11	Drove casing and rollerbit to 14'.		S8: Wet, medium dense, brown, FINE TO COARSE GRAVEL, some fine to coarse sand.
50	20	S9	19 to 21	24/4	4-2-2-2	Drove casing and rollerbit to 19'.	SAND	S9: Wet, loose, grey, FINE TO COARSE SAND.

NOTES:
Driller notes that he maintained a head on the casing as rods were pulled during sampling.

PROJECT NAME: Brandy Brow Road Over East Meadow River
CITY/STATE: Haverhill, Massachusetts
GEI PROJECT NUMBER: 2400197

GEI WOBURN STD 1-LOCATION-LAYER NAME 2400197 BRANDY BROW RD OVER E MEADOW R HAVERHILL.GPJ GEI DATA TEMPLATE 2013.GDT 3/28/24

BOT. OF FRAME CULVERT FOOTINGS EL. 51.8

BOT. OF WINGWALL FOOTINGS EL. 52.8

BORING B–1 (CONT.)

LOCATION: See Site Plan
GROUND SURFACE EL. (ft): ~70
VERTICAL DATUM: Project Datum
DATE START/END: 1/23/2024 - 1/23/2024
DRILLING COMPANY: Northern Drill Service, Inc.

BORING
B-1
PAGE 2 of 2

Elev. (ft)	Depth (ft)	Sample No.	Depth (ft)	Pen./ Rec. (in)	Blows per 6 in. or RQD	Drilling Remarks/ Field Test Data	Layer Name	Soil and Rock Description
45	25	S10	24 to 26	24/9	2-5-4-5	Drove casing and rollerbit to 24'.	SAND	S10: Similar to S9.
40	30	S11	29 to 31	24/0	9-6-7-8	Drove casing and rollerbit to 29'. Redrove S11 with 3" spoon.	GRAVEL	S11 (Redrive): Wet, medium dense, grey, FINE GRAVEL, some fine to coarse sand.
35	35	S12	34 to 36	24/2	6-10-11-9	Drove casing and rollerbit to 34'.		S12: Similar to S9.
30	40	S13	39 to 41	24/10	6-7-8-8	Drove casing and rollerbit to 39'.		S13: Wet, medium dense, grey, FINE TO COARSE GRAVEL, trace fine to coarse sand.
25	45	S14	44 to 46	24/14	4-3-5-7	Drove casing and rollerbit to 44'		S14: Wet, loose, grey, FINE GRAVEL, some fine to coarse sand.
20	50	S15	49 to 51	24/15	WOH-2-3-4	Drove casing and rollerbit to 49'. Driller terminated hole due to time constraints.		S15: Similar to S14.
15	55							Bottom of borehole at 51.0'. Backfilled with soil cuttings and bentonite. Patched with asphalt.

NOTES:
Driller notes that he maintained a head on the casing as rods were pulled during sampling.

PROJECT NAME: Brandy Brow Road Over East Meadow River
CITY/STATE: Haverhill, Massachusetts
GEI PROJECT NUMBER: 2400197

GEI WOBURN STD 1-LOCATION-LAYER NAME 2400197 BRANDY BROW RD OVER E MEADOW R HAVERHILL.GPJ GEI DATA TEMPLATE 2013.GDT 3/28/24

BORING NOTES:

1. LOCATION OF BORINGS SHOWN ON THE PLAN THUS: ✥ B–1
2. BORINGS ARE TAKEN FOR PURPOSE OF DESIGN AND SHOW CONDITIONS AT BORING POINTS ONLY, BUT DO NOT NECESSARILY SHOW THE NATURE OF THE MATERIALS TO BE ENCOUNTERED DURING CONSTRUCTION.
3. WATER LEVELS SHOWN ON THE BORING LOGS WERE OBSERVED AT THE TIME OF TAKING BORINGS AND DO NOT NECESSARILY SHOW THE TRUE GROUND WATER LEVEL.
4. FIGURES IN COLUMNS INDICATE NUMBER OF BLOWS REQUIRED TO DRIVE A 1⅜" I.D. SPLIT SPOON SAMPLER 6" USING A 140 POUND WEIGHT FALLING 30".
5. CONTRACTOR MAY EXAMINE THE SOIL AND ROCK SAMPLES BY CONTACTING GREENMAN–PEDERSEN, INC.
6. BORING B1 WAS MADE ON JANUARY 23, 2024.
7. BORINGS WERE MADE BY NORTHERN DRILL SERVICE, INC. OF NORTHBOROUGH, MA UNDER THE GUIDANCE OF GEI CONSULTANTS, INC.
8. THE NORTH AMERICAN VERTICAL DATUM (NAVD) OF 1988 IS USED THROUGHOUT.
9. GROUND SURFACE ELEVATIONS ARE APPROXIMATE.

BORING LOG
SCALE: ⅜" = 1'–0"

GPI Greenman-Pedersen, Inc.
Engineering & Construction Services
181 Ballardvale Street, Suite 202, Wilmington, MA 01887
Tel: (978) 570-2999 Fax: (978) 658-3044
http://www.gpinet.com

PREPARED FOR
CITY OF HAVERHILL
4 SUMMER STREET
HAVERHILL, MA 01830

REPLACEMENT OF BRANDY BROW ROAD CULVERT OVER EAST MEADOW RIVER
BRANDY BROW ROAD
HAVERHILL, MASSACHUSETTS

REVISIONS

NO.	REVISION	DATE

11/6/2025

DRAWN/DESIGN BY	CHECKED BY
CMP	RWM

BORING LOG

SCALE: AS NOTED

NEX2300100.00

BR03-BORING LOGS.DWG 10/14/2024

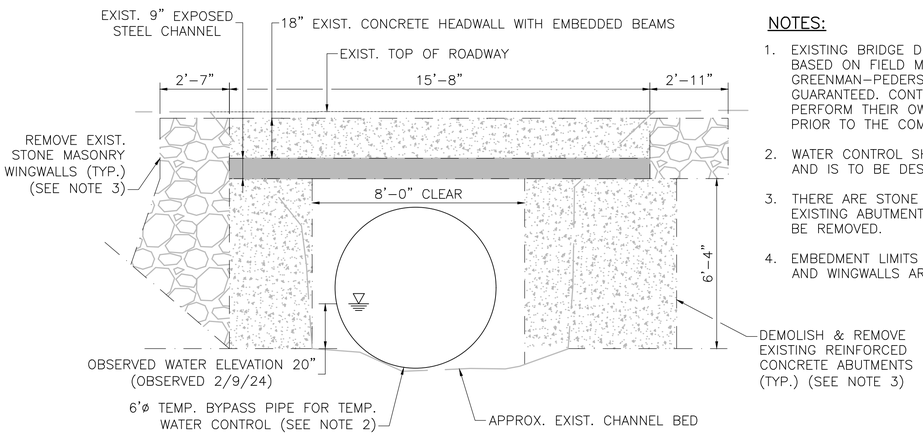

EXISTING CULVERT SOUTH ELEVATION

SCALE: 3/8" = 1'-0"

NOTES:

1. EXISTING BRIDGE DIMENSIONS SHOWN ARE BASED ON FIELD MEASUREMENTS TAKEN BY GREENMAN-PEDERSEN, INC. AND ARE NOT GUARANTEED. CONTRACTOR IS RESPONSIBLE TO PERFORM THEIR OWN FIELD INVESTIGATION PRIOR TO THE COMMENCEMENT OF WORK.
2. WATER CONTROL SHOWN IS ONLY CONCEPTUAL AND IS TO BE DESIGNED BY THE CONTRACTOR.
3. THERE ARE STONE MASONRY PORTIONS OF THE EXISTING ABUTMENT NOT SHOWN THAT ARE TO BE REMOVED.
4. EMBEDMENT LIMITS OF EXISTING ABUTMENTS AND WINGWALLS ARE UNKNOWN.

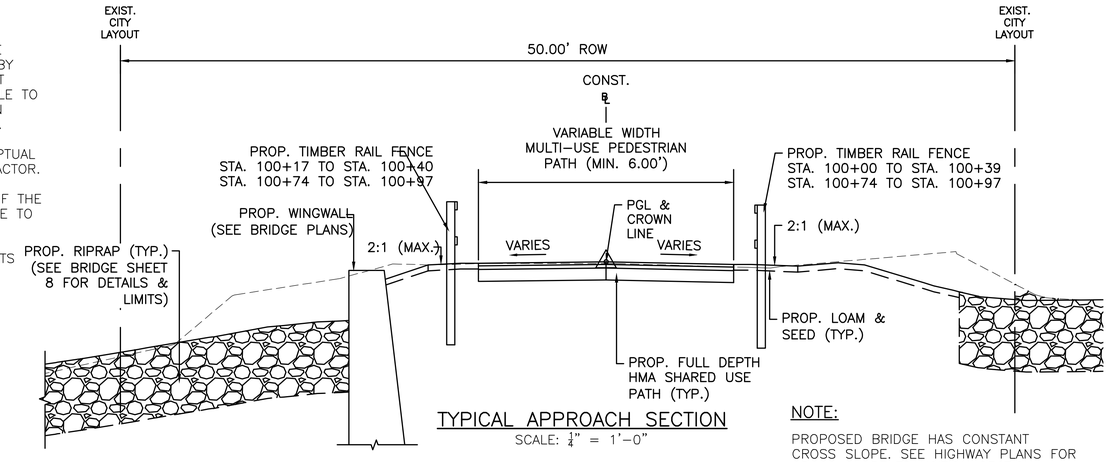

TYPICAL APPROACH SECTION

SCALE: 1/4" = 1'-0"

NOTE:

PROPOSED BRIDGE HAS CONSTANT CROSS SLOPE. SEE HIGHWAY PLANS FOR CROSS SLOPE TRANSITION SECTION.

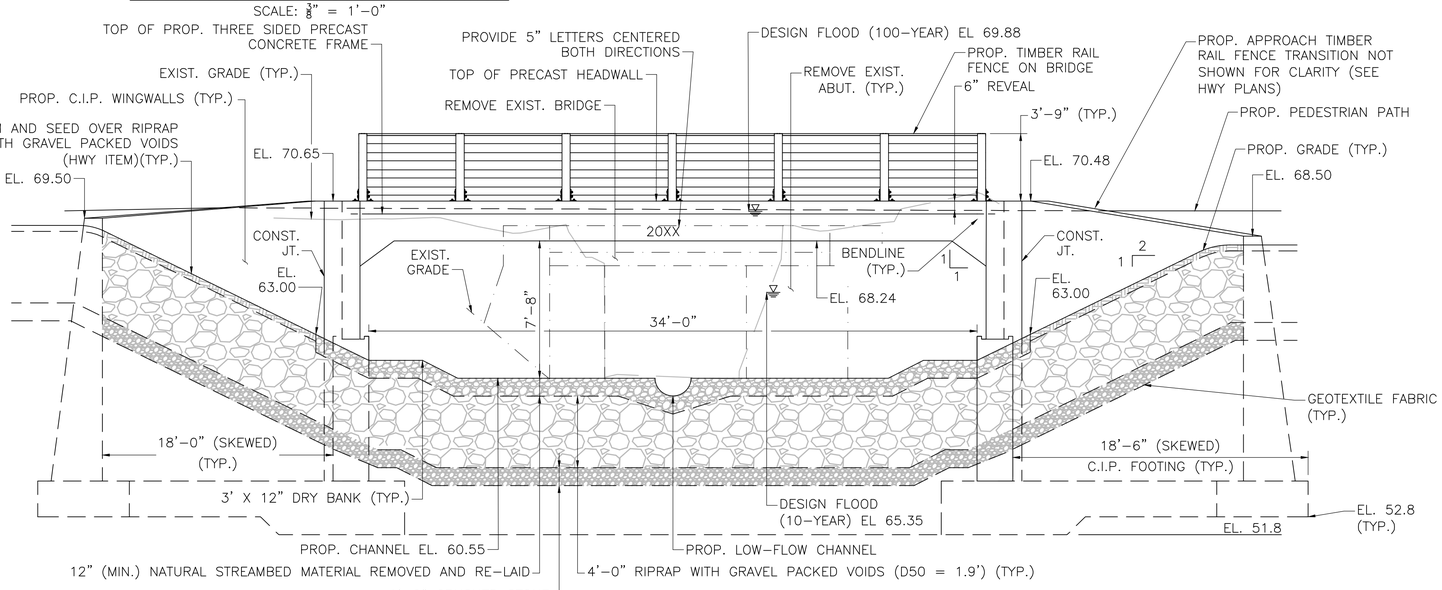

NORTH ELEVATION

SCALE: 1/4" = 1'-0"

ELEVATION NOTES:

1. CONTRACT COMPLETION DATE TO BE IMPRINTED ON THE TOP SLAB OF BOTH FASCIA FRAME HEADWALL SECTIONS, CENTERED BOTH HORIZONTALLY AND VERTICALLY.
2. CHAMFER WIDTH TO MATCH THREE SIDED FRAME WALL THICKNESS.
3. TIMBER RAIL FENCE INSTALLED BEHIND THE WINGWALLS NOT SHOWN, SEE BRIDGE SHEET 1.
4. ASPHALT SHALL BE APPLIED DIRECTLY TO THE MEMBRANE/TOP OF OF FRAME. THE CONTRACTOR SHALL ADJUST/INCREASE ASPHALT THICKNESS OVER THE FRAME AS REQUIRED TO ACCOMMODATE THE FRAME DESIGN CEILING THICKNESS.
5. WINGWALL TIMBER RAIL FENCE NOT SHOWN FOR CLARITY.
6. FOLD DOWN BOLLARD NOT SHOWN FOR CLARITY.

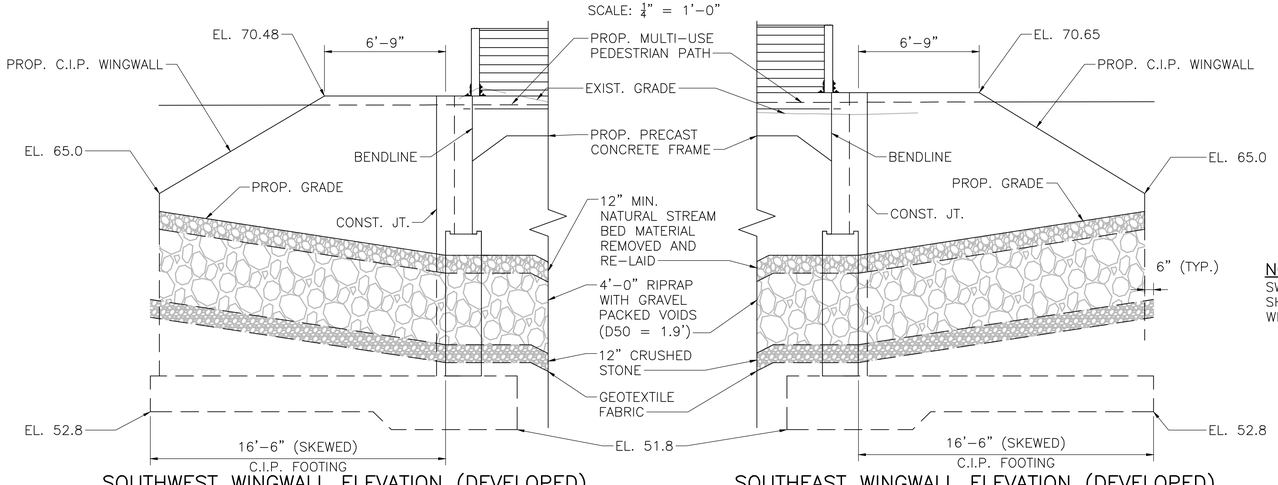

NOTE:

SW AND SE WINGWALLS SHOWN, NW AND NE WINGWALLS SIMILAR.

SOUTHWEST WINGWALL ELEVATION (DEVELOPED)

SCALE: 1/4" = 1'-0"

SOUTHEAST WINGWALL ELEVATION (DEVELOPED)

SCALE: 1/4" = 1'-0"

GPI Greenman-Pedersen, Inc.
Engineering & Construction Services
181 Ballardvale Street, Suite 202, Wilmington, MA 01887
Tel: (978) 570-2999 Fax: (978) 658-3044
http://www.gpinet.com

PREPARED FOR
CITY OF HAVERHILL
4 SUMMER STREET
HAVERHILL, MA 01830

REPLACEMENT OF BRANDY BROW ROAD CULVERT OVER EAST MEADOW RIVER
BRANDY BROW ROAD
HAVERHILL, MASSACHUSETTS

REVISIONS

NO.	REVISION	DATE

11/6/2025

DRAWN/DESIGN BY	CHECKED BY
CMP	RWM

ELEVATIONS & CROSS SECTIONS

SCALE: AS NOTED

NEX2300100.00

BR04_ELEV & CROSS SECTION.DWG 11/7/2025

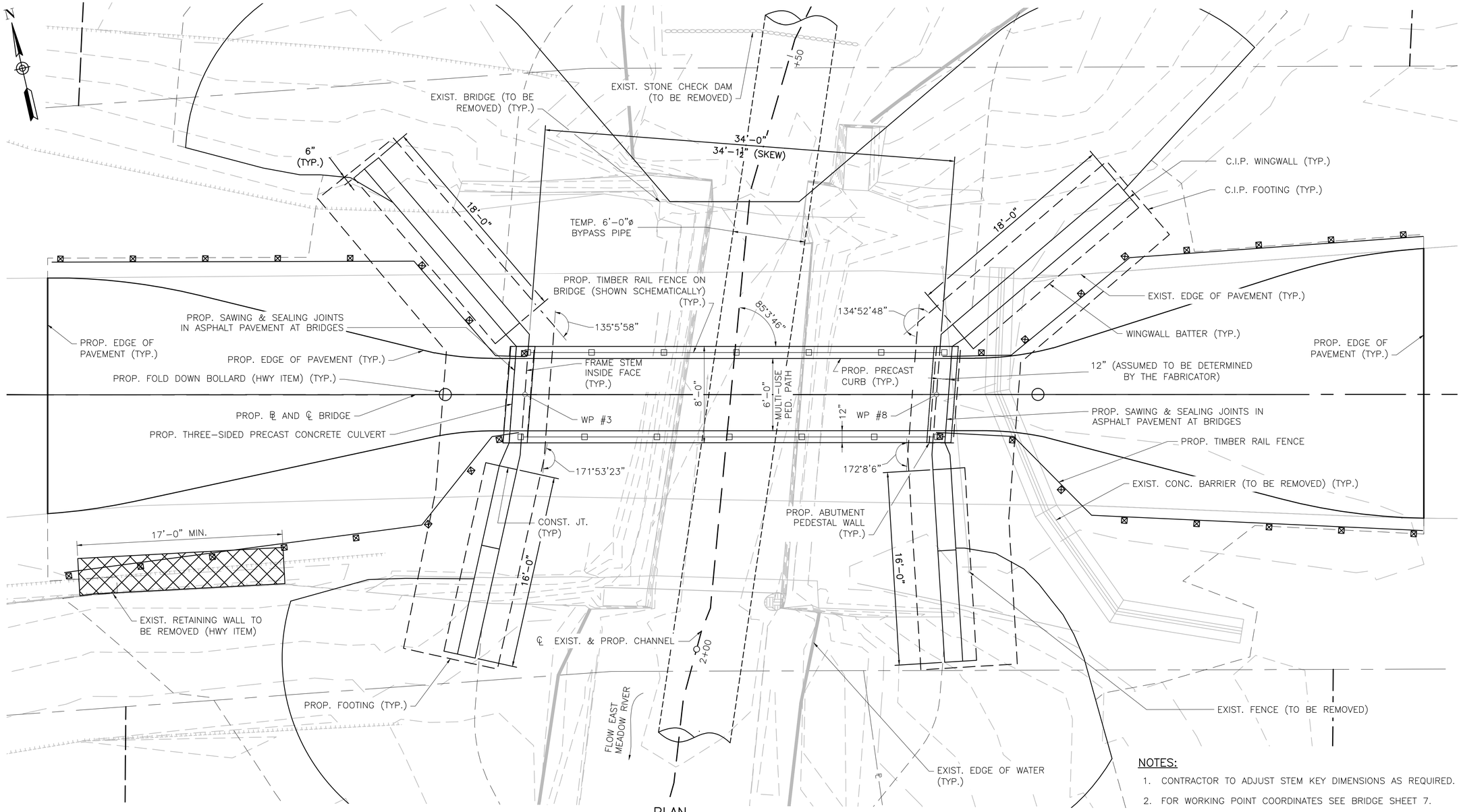

PLAN

SCALE: ¼" = 1'-0"

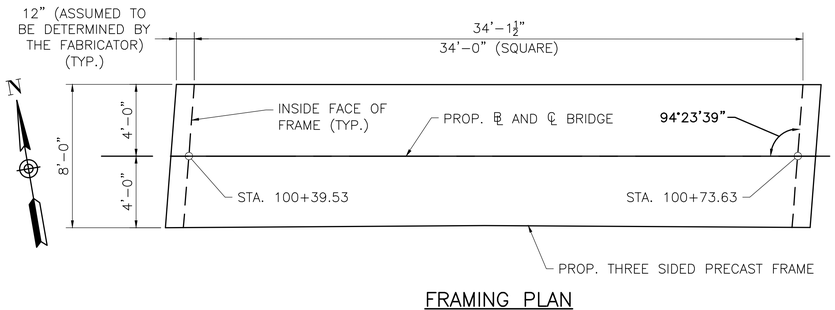

FRAMING PLAN

SCALE: ¼" = 1'-0"

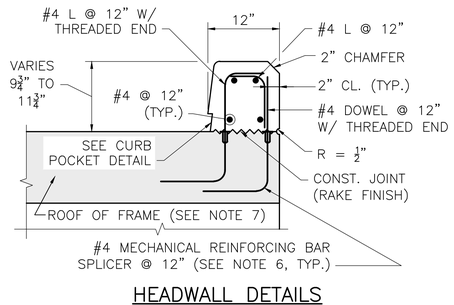

HEADWALL DETAILS

SCALE: 1" = 1'-0"

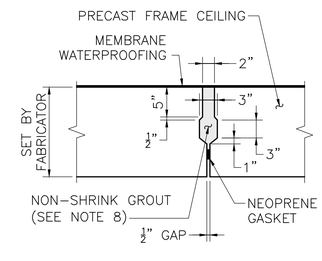

FRAME SHEAR KEY

SCALE: 1" = 1'-0"

NOTES:

1. CONTRACTOR TO ADJUST STEM KEY DIMENSIONS AS REQUIRED.
2. FOR WORKING POINT COORDINATES SEE BRIDGE SHEET 7.
3. TEMPORARY WATER CONTROL PIPE SHOWN FOR REFERENCE. SYSTEM TO BE CONTRACTOR DESIGNED.
4. FOR SCOUR PROTECTION LIMITS SEE BRIDGE SHEET 8.
5. FOR EXISTING RIGHT OF WAY AND PROPOSED EASEMENTS SEE BRIDGE SHEET 1.
6. THE CONTRACTOR MAY SUBSTITUTE EXTENDED #4 HOOPS FOR THE MECHANICAL REINFORCING BAR SPLICERS AND THREADED REBARS AS SHOWN.
7. FRAME REINFORCEMENT IS NOT SHOWN FOR CLARITY.
8. SHEAR KEY DETAILS AND DIMENSIONS ARE CONCEPTUAL AND MAY BE ALTERED BY THE FABRICATOR TO SUIT THEIR OPERATIONS, HOWEVER THE FUNCTION AND INTENT OF THE DETAIL MUST BE MET. ALL DETAILS ARE TO BE APPROVED BY THE ENGINEER BEFORE FABRICATION.

SHEET 5 OF 9 SHEETS BRIDGE NO. H-12-021 (DOQ)

BR05-FRAMING PLAN.DWG 11/5/2025

GPI Greenman-Pedersen, Inc.
Engineering & Construction Services
181 Ballardvale Street, Suite 202, Wilmington, MA 01887
Tel: (978) 570-2999 Fax: (978) 658-3044
http://www.gpinet.com

PREPARED FOR
CITY OF HAVERHILL
4 SUMMER STREET
HAVERHILL, MA 01830

REPLACEMENT OF BRANDY BROW ROAD CULVERT OVER EAST MEADOW RIVER
BRANDY BROW ROAD
HAVERHILL, MASSACHUSETTS

REVISIONS

NO.	REVISION	DATE

11/6/2025

DRAWN/DESIGN BY	CHECKED BY
CMP	RWM

BRIDGE PLAN AND DETAILS

SCALE: AS NOTED

NEX2300100.00

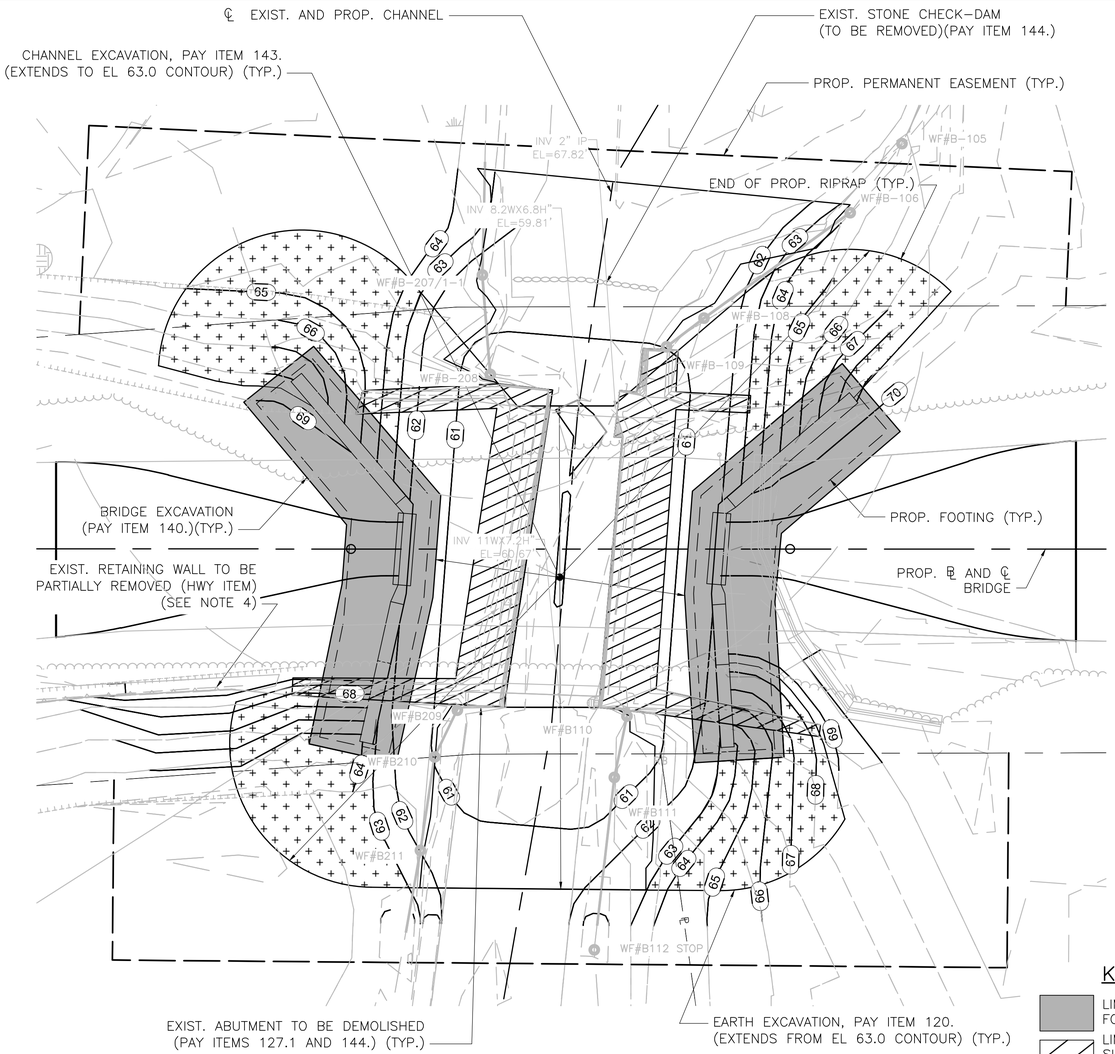

EXCAVATION PLAN

SCALE: $\frac{1}{8}$" = 1'-0"

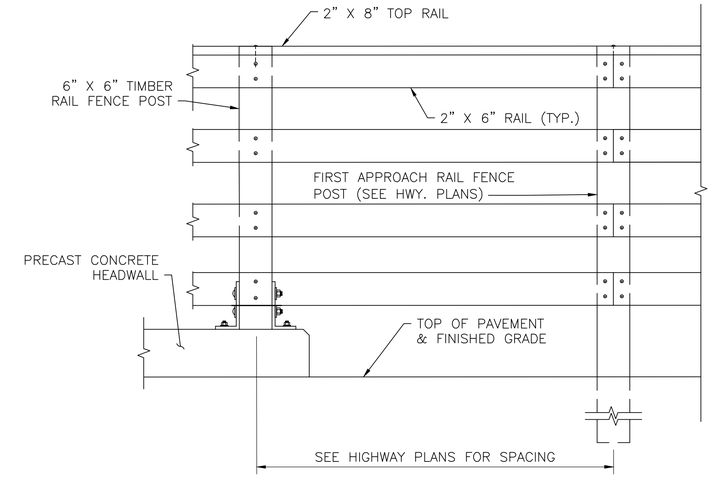

TIMBER BRIDGE RAILING TRANSITION TO APPROACH RAILING

SCALE: 1" = 1'-0"

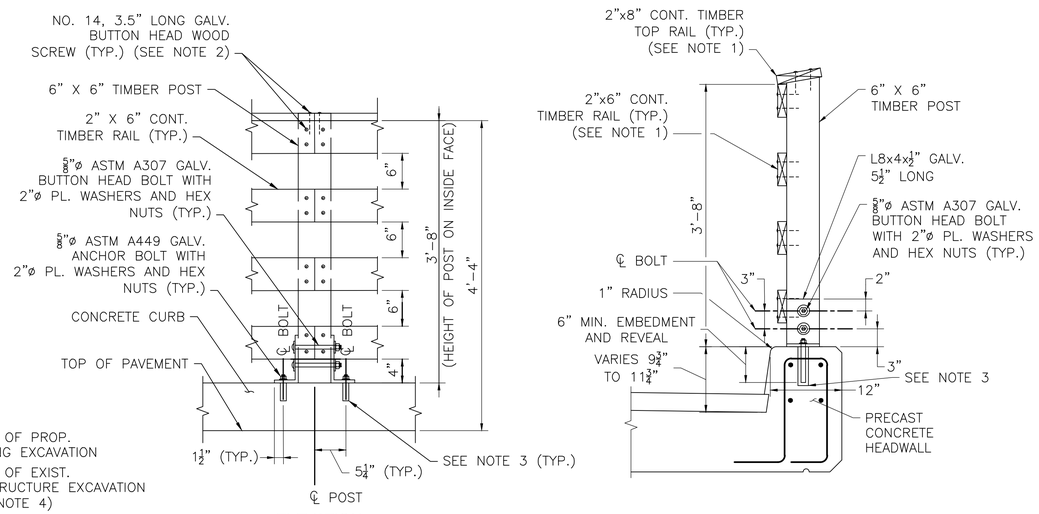

TIMBER RAIL FENCE ON BRIDGE DETAILS

SCALE: 1" = 1'-0"

KEY

- LIMITS OF PROP. FOOTING EXCAVATION
- LIMITS OF EXIST. SUBSTRUCTURE EXCAVATION (SEE NOTE 4)
- LIMITS OF PROP. RIPRAP EXCAVATION
- LIMITS OF CHANNEL EXCAVATION

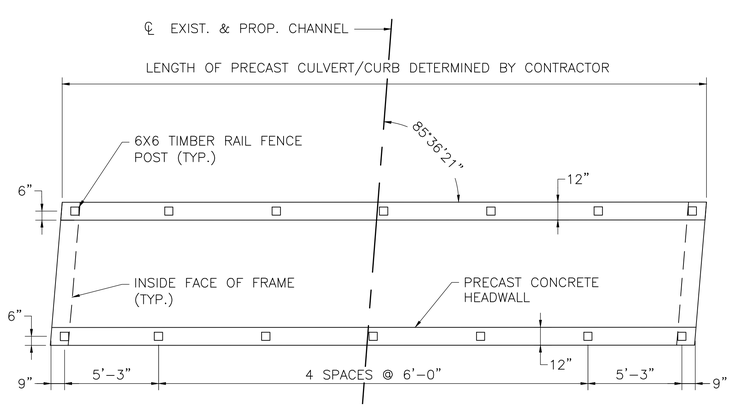

TIMBER RAILING POST LAYOUT – PLAN

SCALE: $\frac{1}{4}$" = 1'-0"

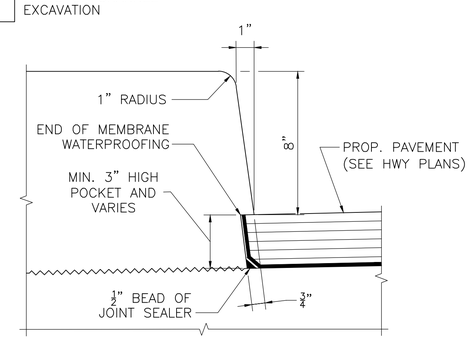

NOTE:
TURN MEMBRANE UP INTO 3" HIGH POCKET.

CURB PAVEMENT POCKET DETAIL

SCALE: 3" = 1'-0"

NOTES:

1. TIMBER RAILS SHALL BE CONTINUOUS OVER A MINIMUM OF THREE POSTS WHERE POSSIBLE.
2. ELEVATION SHOWN REFLECTS LOCATION OF RAIL BUTT JOINT, AT INTERMEDIATE JOINT ONLY TWO WOOD SCREWS REQUIRED PER RAILING.
3. CONTRACTOR CULVERT DESIGN TO INCLUDE THREADED INSERTS FOR RAILING ANCHOR BOLTS.
4. ROCKS/STONES FROM THE EXISTING DEMOLISHED ABUTMENT, WINGWALLS AND RETAINING WALL MAY BE RE-USED FOR THE CHANNEL RECONSTRUCTION. SEE SCOUR PROTECTION PLAN & CHANNEL DETAILS SHEET AND SPECIAL PROVISIONS FOR ADDITIONAL INFORMATION AND REQUIREMENTS.

SHEET 6 OF 9 SHEETS BRIDGE NO. H-12-021 (DOQ)

GPI Greenman-Pedersen, Inc.
Engineering & Construction Services
181 Ballardvale Street, Suite 202, Wilmington, MA 01887
Tel: (978) 570-2999 Fax: (978) 658-3044
http://www.gpinet.com

PREPARED FOR
CITY OF HAVERHILL
4 SUMMER STREET
HAVERHILL, MA 01830

REPLACEMENT OF BRANDY BROW ROAD CULVERT OVER EAST MEADOW RIVER

BRANDY BROW ROAD
HAVERHILL, MASSACHUSETTS

REVISIONS

NO.	REVISION	DATE

11/6/2025

DRAWN/DESIGN BY	CHECKED BY
CMP	RWM

EXCAVATION PLAN & TIMBER RAIL FENCE DETAILS

SCALE: AS NOTED

NEX2300100.00

BR06-EXCAV. & RAILING.DWG 11/6/2025

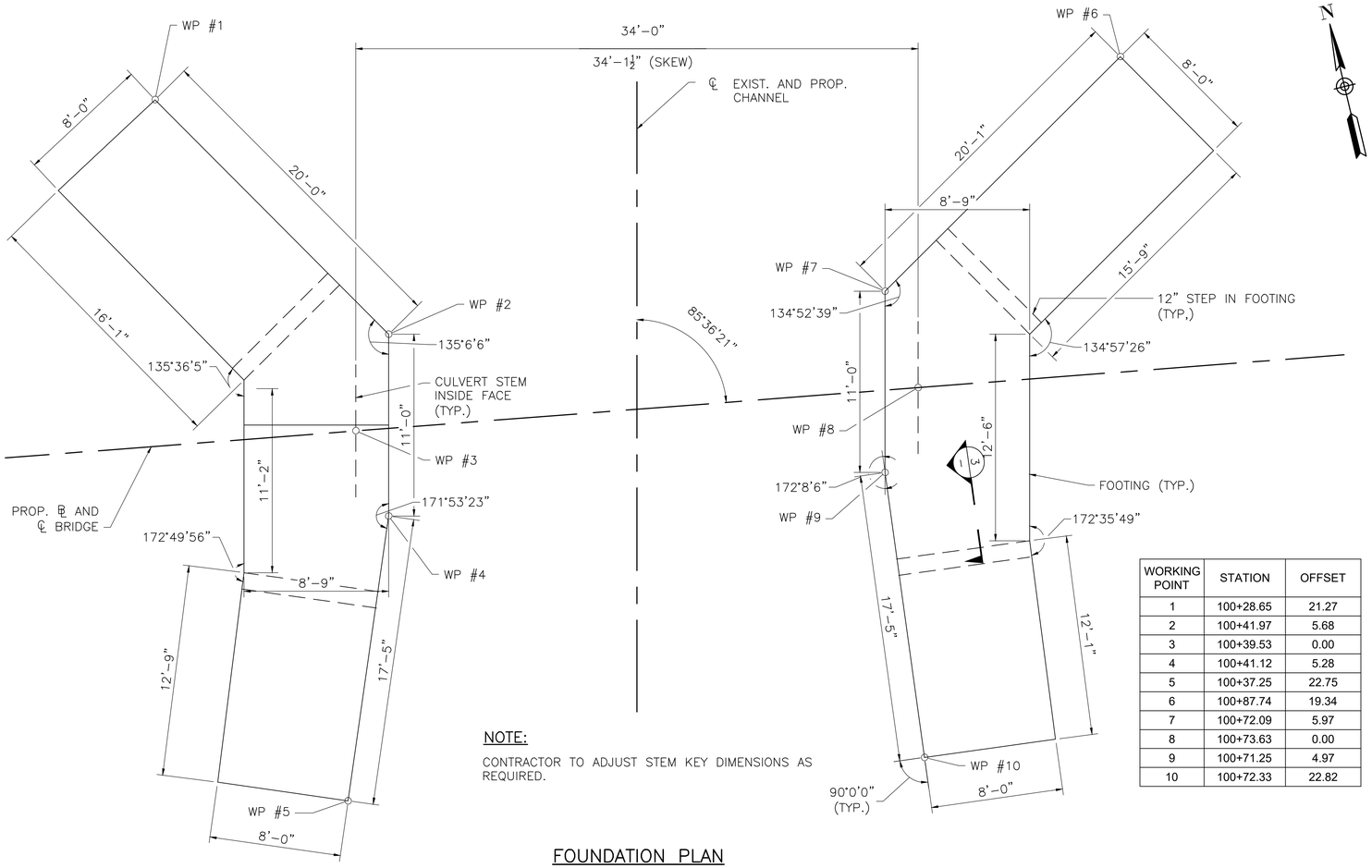

WORKING POINT	STATION	OFFSET
1	100+28.65	21.27
2	100+41.97	5.68
3	100+39.53	0.00
4	100+41.12	5.28
5	100+37.25	22.75
6	100+87.74	19.34
7	100+72.09	5.97
8	100+73.63	0.00
9	100+71.25	4.97
10	100+72.33	22.82

NOTE:

CONTRACTOR TO ADJUST STEM KEY DIMENSIONS AS REQUIRED.

FOUNDATION PLAN

SCALE: ¼" = 1'-0"

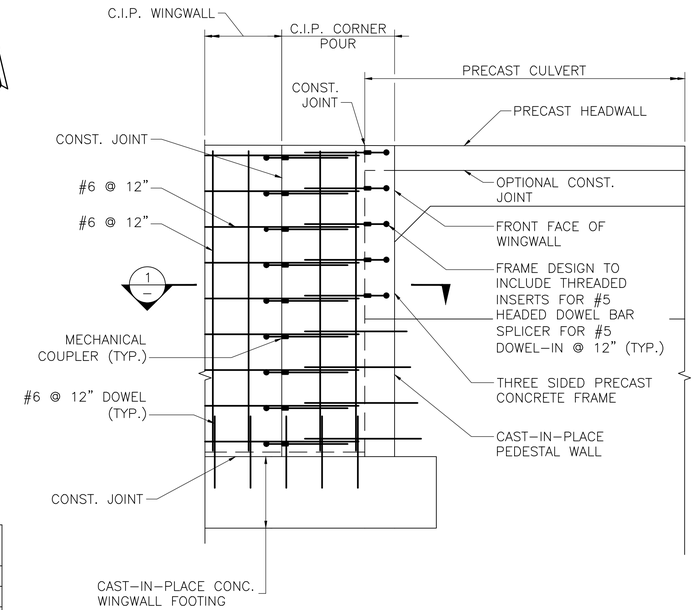

NOTES:

1. CULVERT REINFORCING NOT SHOWN, TO BE DETERMINED BY CONTRACTOR'S DESIGN.
2. NORTHWEST WINGWALL SHOWN, OTHERS ARE SIMILAR.

WINGWALL TO FRAME REINFORCEMENT DETAIL

SCALE: ½" = 1'-0"

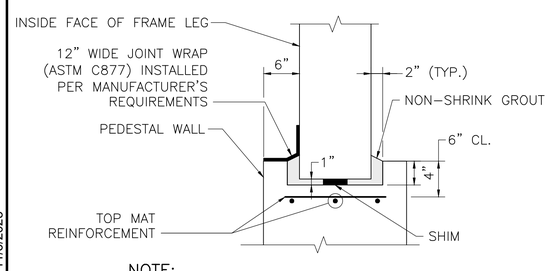

NOTE:

DETAILS AND DIMENSIONS ARE CONCEPTUAL AND MAY BE ALTERED BY THE FABRICATOR TO SUIT THEIR OPERATIONS, HOWEVER THE FUNCTION AND INTENT OF THE DETAIL MUST BE MET. ALL DETAILS TO BE APPROVED BY ENGINEER BEFORE FABRICATION.

GROUTED PEDESTAL WALL KEYWAY

SCALE: 1" = 1'-0"

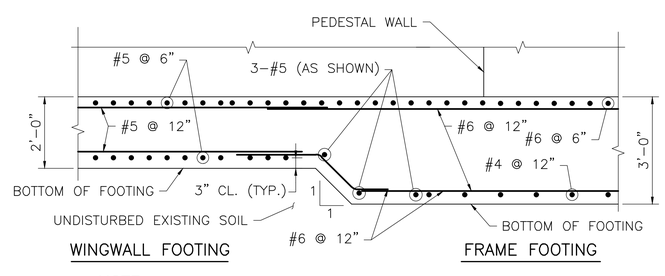

NOTE:

ADJUST REINFORCEMENT TO MAINTAIN MIN. 2" OF COVER AT KEYWAY.

SECTION 3

SCALE: ½" = 1'-0"

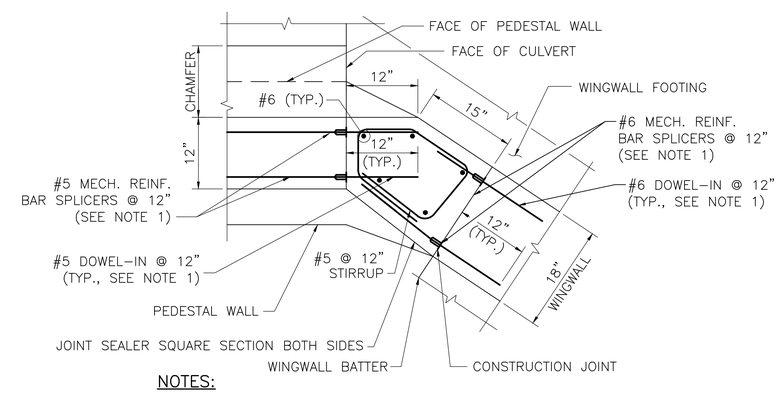

NOTES:

1. THE CONTRACTOR MAY SUBSTITUTE #5 DOWELS, 3'-0" LONG, FOR MECHANICAL REINFORCING BAR SPLICERS AND THREADED REBARS.
2. CULVERT AND WINGWALL REINFORCEMENT IS NOT SHOWN FOR CLARITY.

SECTION 1

SCALE: 1" = 1'-0"

SHEET 7 OF 9 SHEETS BRIDGE NO. H-12-021 (DOQ)

BR07-FOOTING PLAN AND MISC DETAILS.DWG 11/6/2025

GPI Greenman-Pedersen, Inc.
Engineering & Construction Services
181 Ballardvale Street, Suite 202, Wilmington, MA 01887
Tel: (978) 570-2999 Fax: (978) 658-3044
http://www.gpinet.com

PREPARED FOR
CITY OF HAVERHILL
4 SUMMER STREET
HAVERHILL, MA 01830

REPLACEMENT OF BRANDY BROW ROAD CULVERT OVER EAST MEADOW RIVER
BRANDY BROW ROAD
HAVERHILL, MASSACHUSETTS

REVISIONS

NO.	REVISION	DATE

11/6/2025

DRAWN/DESIGN BY	CHECKED BY
CMP	RWM

FOOTING PLAN & MISC. DETAILS

SCALE: AS NOTED

NEX2300100.00

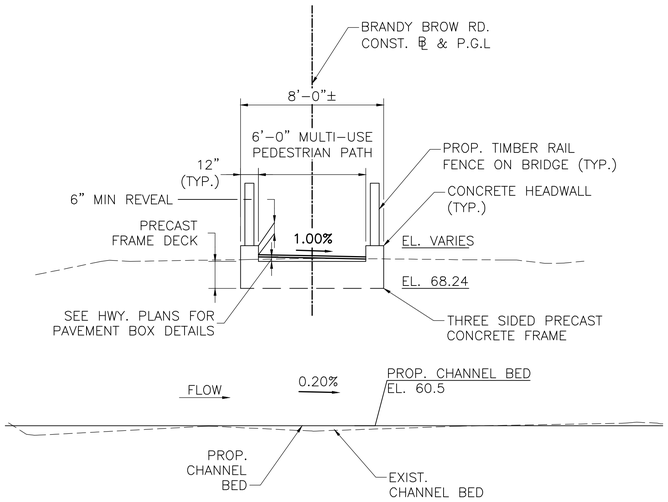

LONGITUDINAL SECTION
(SHOWN ALONG ℄ OF BRIDGE)

SCALE: ¼" = 1'-0"

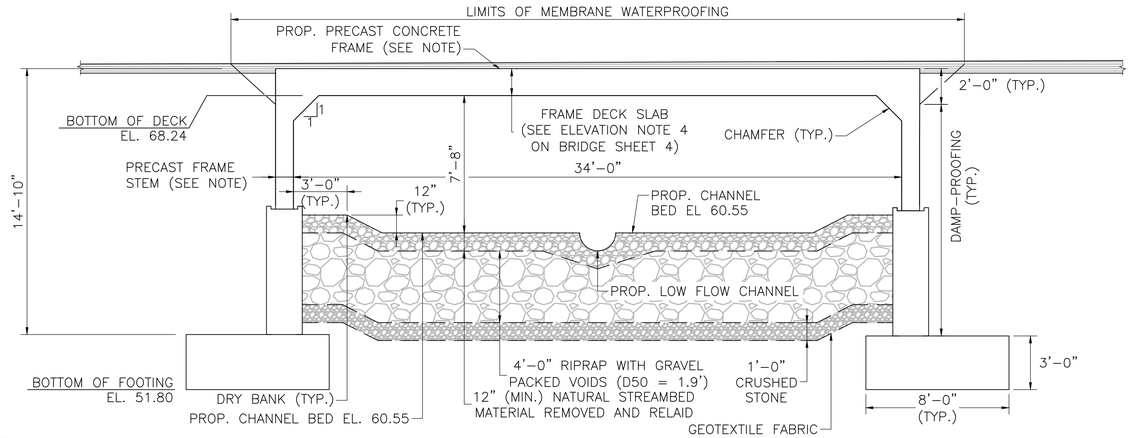

PRECAST FRAME TYPICAL SECTION
(SHOWN SQUARE TO CULVERT, LOOKING NORTH)

SCALE: ¼" = 1'-0"

NOTE:

DIMENSIONS SHOWN INDICATE PRELIMINARY DESIGN DIMENSIONS. CONTRACTOR TO DETERMINE FINAL DIMENSIONS BASED UPON THEIR APPROVED DESIGN.

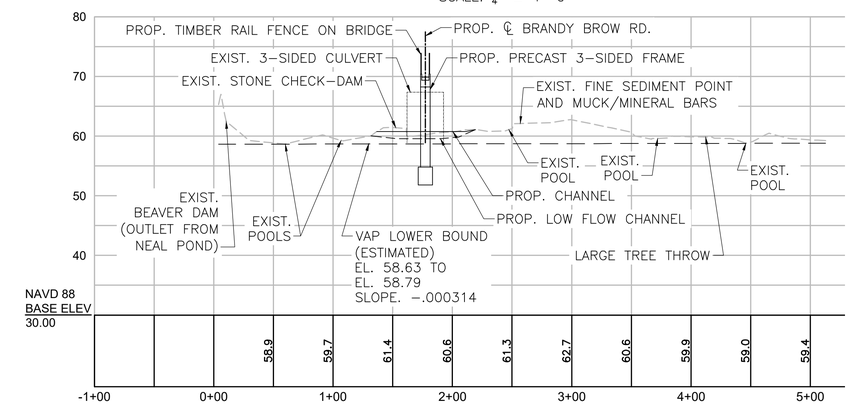

STREAMLINE PROFILE

HORIZONTAL SCALE: 1" = 60'
VERTICAL SCALE: 1" = 12'

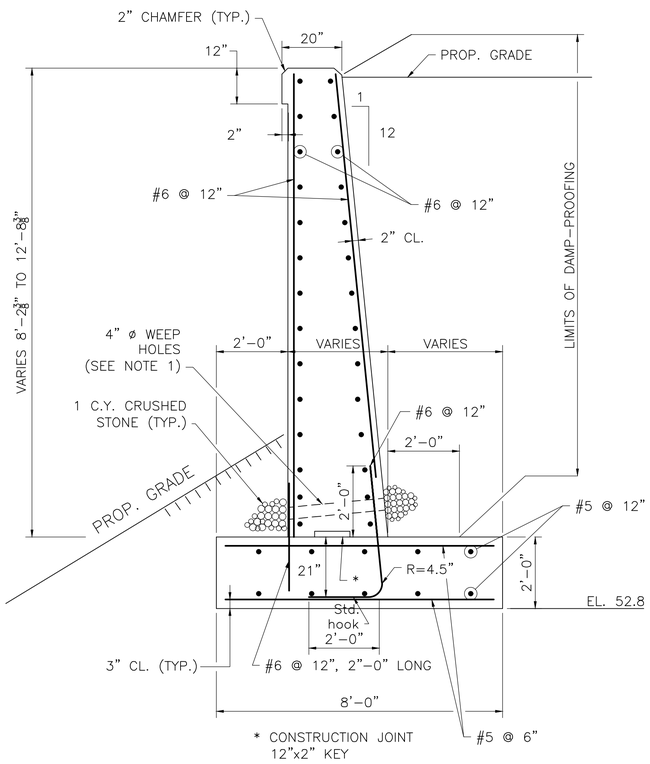

WINGWALL SECTION

SCALE: ½" = 1'-0"

WINGWALL NOTES:

1. 4"ø WEEP HOLES 10'-0" O.C. LOCATED 12" ABOVE THE HEEL OF THE FOOTING SLOPING 1" PER FOOT TOWARDS THE FRONT FACE. PROVIDE 1 CUBIC YARD OF CRUSHED STONE AT EACH END OF WEEP HOLE.
2. FACTORED BEARING PRESSURE PER AASHTO LRFD BRIDGE DESIGN SPECIFICATIONS.
   - STRENGTH I LIMIT STATE
     FACTORED BEARING PRESSURE = 2.82
3. FACTORED BEARING RESISTANCE = 9.06 KSF FOR THE STRENGTH I LIMIT STATE AND IS THE PRODUCT OF THE NOMINAL BEARING RESISTANCE AND A RESISTANCE FACTOR OF 0.55.

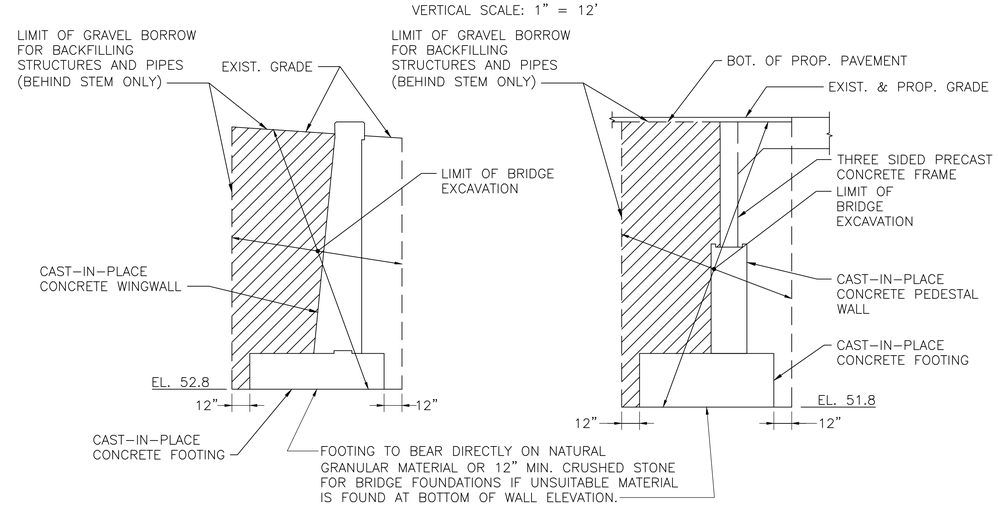

WINGWALL FRAME

GRAVEL BORROW AND BRIDGE EXCAVATION LIMITS

SCALE: ¼" = 1'-0"

GPI Greenman-Pedersen, Inc.
Engineering & Construction Services
181 Ballardvale Street, Suite 202, Wilmington, MA 01887
Tel: (978) 570-2999 Fax: (978) 658-3044
http://www.gpinet.com

PREPARED FOR
CITY OF HAVERHILL
4 SUMMER STREET
HAVERHILL, MA 01830

REPLACEMENT OF BRANDY BROW ROAD CULVERT OVER EAST MEADOW RIVER
BRANDY BROW ROAD
HAVERHILL, MASSACHUSETTS

REVISIONS

NO.	REVISION	DATE

11/6/2025

DRAWN/DESIGN BY	CHECKED BY
CMP	RWM

LONGITUDINAL & WINGWALL SECTIONS

SCALE: AS NOTED

NEX2300100.00

BR08_LONG. SECTION & WINGWALL SECTION.DWG 10/31/2025

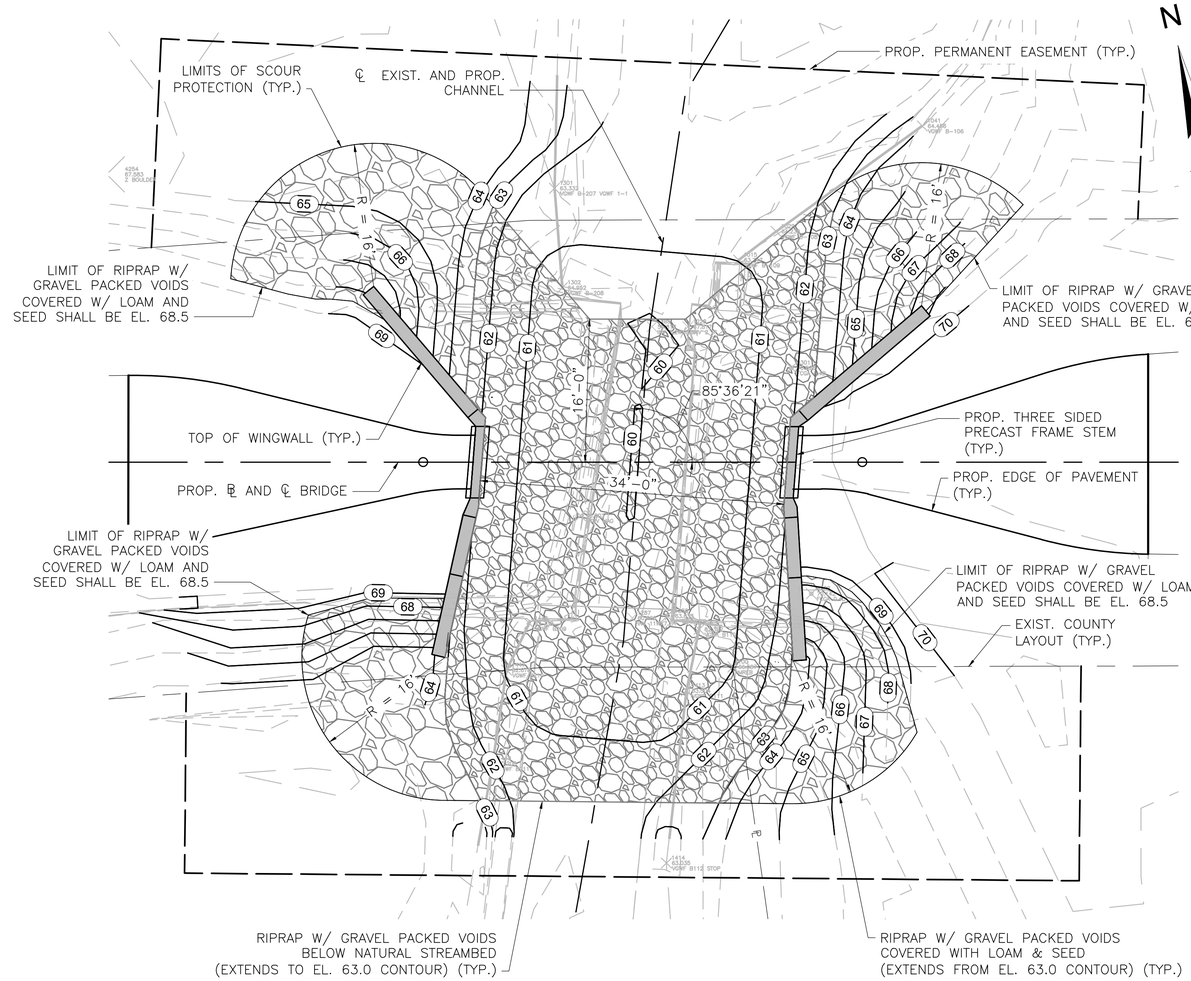

SCOUR PROTECTION – PLAN

SCALE: $\frac{1}{8}$" = 1'–0"

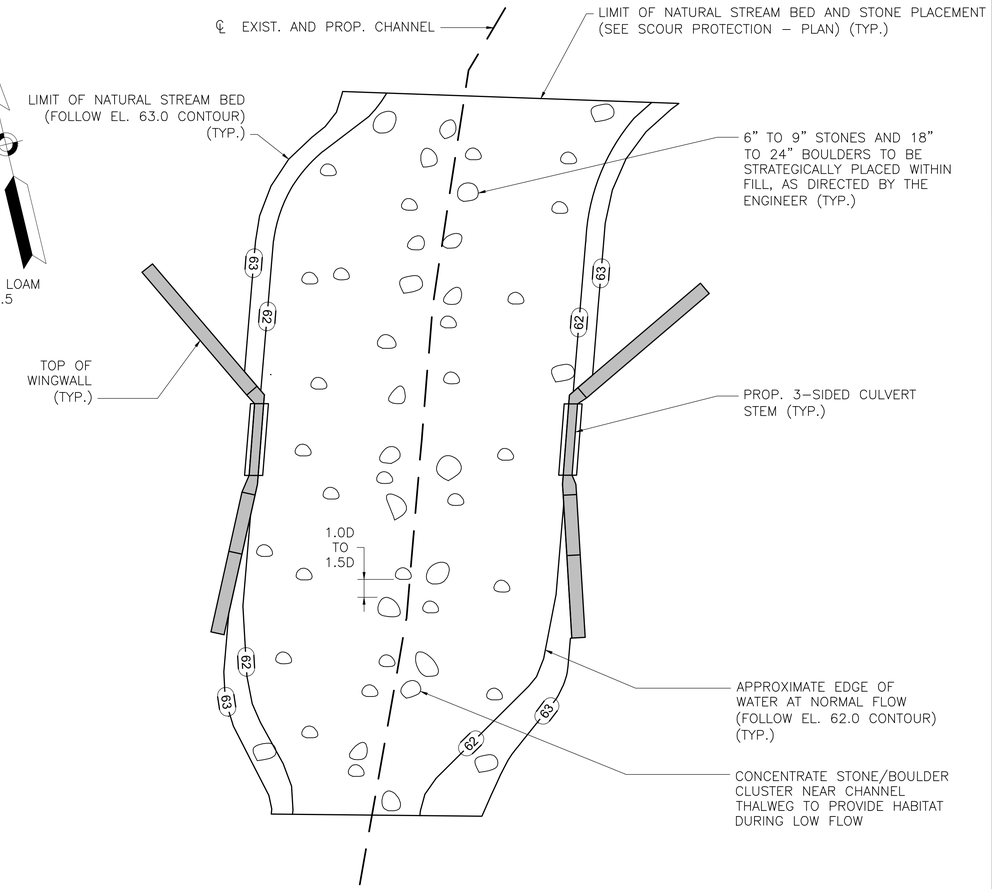

NATURAL STREAMBED LIMIT AND CHANNEL ROCK PLACEMENT – PLAN

NOT TO SCALE

KEY

- RIPRAP W/GRAVEL PACKED VOIDS BELOW NATURAL STREAMBED
- RIPRAP W/GRAVEL PACKED VOIDS COVERED W/LOAM AND SEED

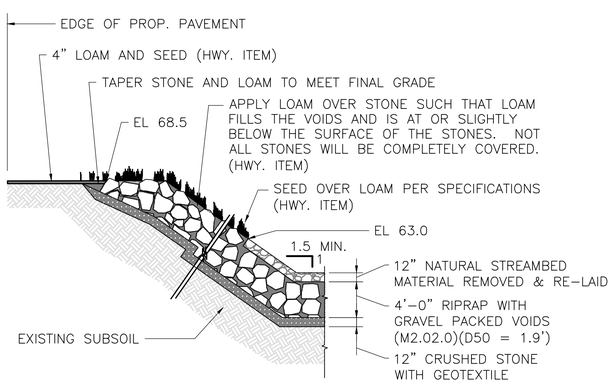

LOAM & SEED OVER RIPRAP DETAIL (NON–WATERWAY)

NOT TO SCALE

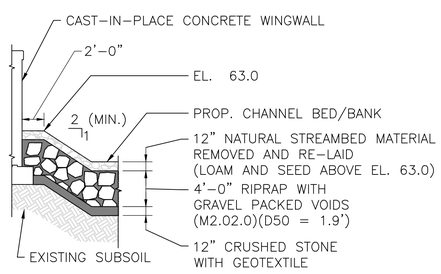

RIPRAP AT WALL DETAIL (WATERWAY)

NOT TO SCALE

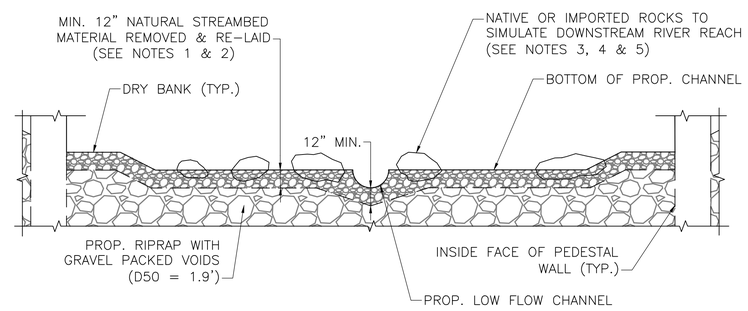

NOTE: PROP. FRAME CHANNEL IS SHOWN, UPSTREAM AND DOWNSTREAM CHANNEL IS SIMILAR.

CHANNEL ROCK PLACEMENT DETAIL

NOT TO SCALE

RECONSTRUCTED CHANNEL NOTES:

1. NATURAL STREAMBED MATERIAL SHALL BE PLACED IN MAXIMUM 4" LIFTS. THE CONTRACTOR SHALL WASH FINES INTO THE LIFTS TO FILL VOIDS TO THE SATISFACTION OF THE ENGINEER TO PREVENT SUBSURFACE WATER MIGRATION.
2. NATURAL AND/OR IMPORTED STREAMBED MATERIAL SHALL MATCH EXISTING STREAM BED CHARACTERISTICS/GRADATION IN THE UNDISTURBED REACH GREATER THAN 175 LF DOWNSTREAM OF THE CULVERT.
3. EXCAVATED STONES (COBBLES AND BOULDERS) SHALL BE SALVAGED AND STOCKPILED ON SITE. THESE SALVAGED MATERIALS SHALL BE RE–USED IN THE RECONSTRUCTED CHANNEL TO SIMULATE THE NATURAL DOWNSTREAM REACH CONDITIONS.
4. EXCAVATED STONE MATERIAL THAT IS MAN–MADE OR NOT MATCHING THE DOWNSTREAM REACH CONDITIONS SHALL BE REMOVED AND DISCARDED.
5. BOULDER PLACEMENT AND EMBEDMENT IS SCHEMATICALLY SHOWN AND SHALL BE SUBJECT TO THE APPROVAL OF THE ENGINEER BASED ON EXISTING FIELD CONDITIONS.
6. ALL COSTS FOR PLACING NATIVE/IMPORTED ROCKS IN THE PROPOSED CHANNEL SHALL BE INCLUDED IN ITEM 983.35, STREAMBED MATERIAL REMOVED AND REPLAID.

GPI Greenman-Pedersen, Inc.
Engineering & Construction Services
181 Ballardvale Street, Suite 202, Wilmington, MA 01887
Tel: (978) 570-2999 Fax: (978) 658-3044
http://www.gpinet.com

PREPARED FOR
CITY OF HAVERHILL
4 SUMMER STREET
HAVERHILL, MA 01830

REPLACEMENT OF BRANDY BROW ROAD CULVERT OVER EAST MEADOW RIVER
BRANDY BROW ROAD
HAVERHILL, MASSACHUSETTS

REVISIONS

NO.	REVISION	DATE

11/6/2025

DRAWN/DESIGN BY	CHECKED BY
CMP	RWM

SCOUR PROTECTION PLAN & CHANNEL DETAILS

SCALE: AS NOTED

NEX2300100.00

BR09-RIPRAP DETAILS.DWG 11/7/2025

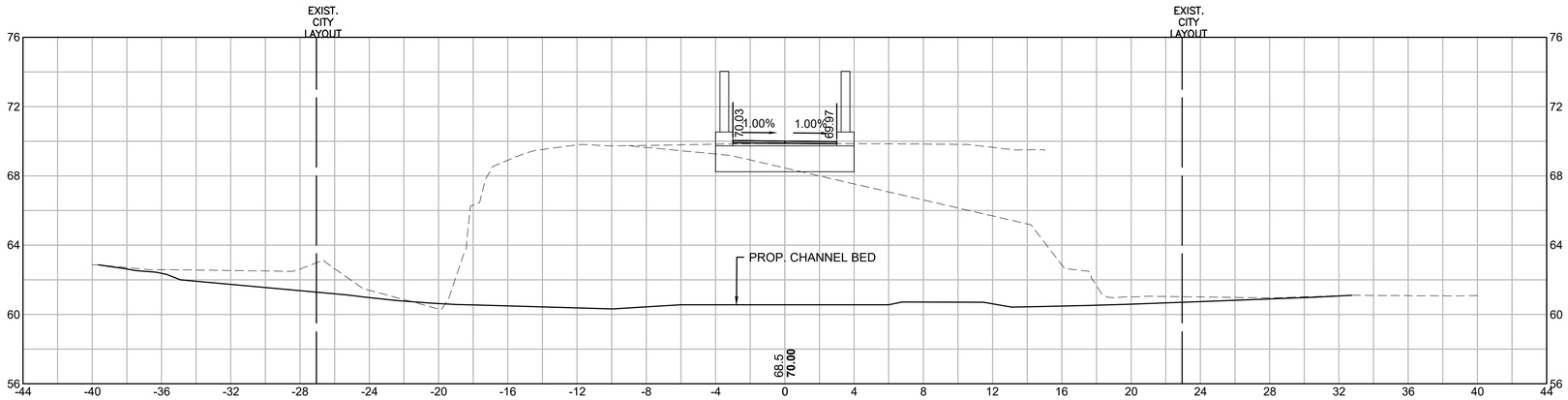

100+50

CUT = 0.00 s.f.

FILL = 0.00 s.f.

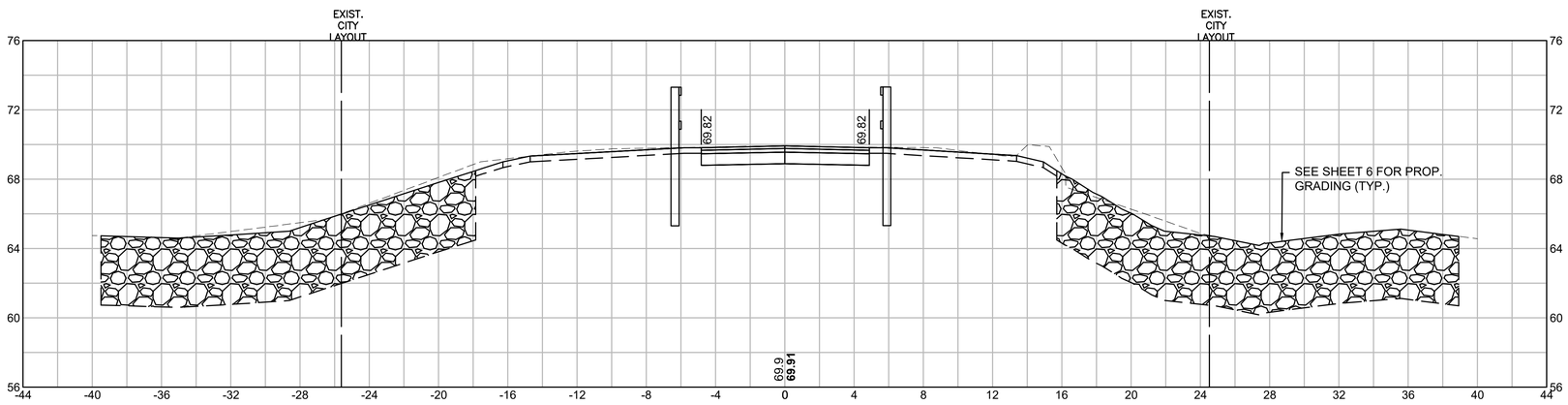

100+25

CUT = 21.57 s.f.

FILL = 0.00 s.f.

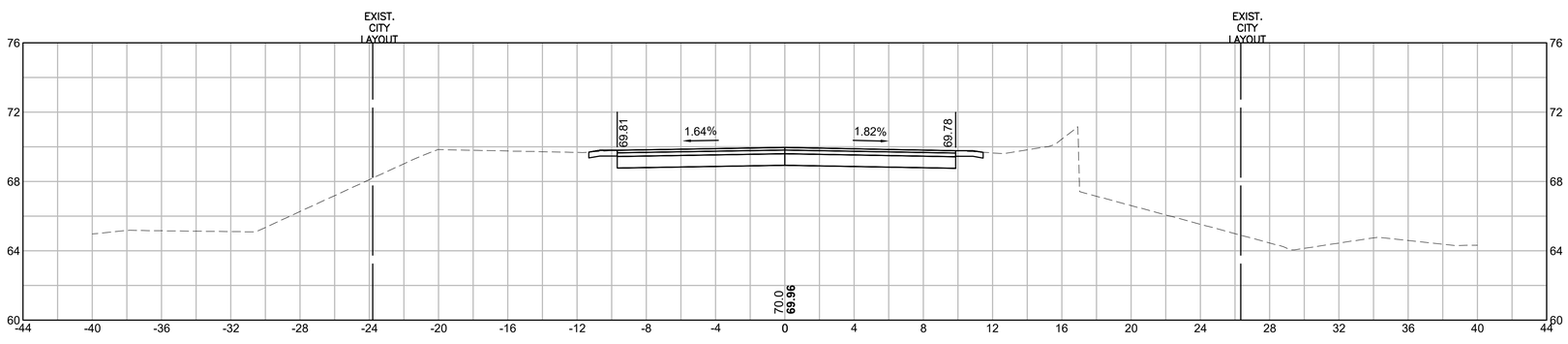

100+00

CUT = 20.90 s.f.

FILL = 0.00 s.f.

HOR. SCALE IN FEET

VER. SCALE IN FEET

2300100.00_HD (XS).DWG 10/14/2024

GPI Engineering Design Planning Construction Inspection
978.570.2999 GPINET.COM
Greenman-Pedersen, Inc.
181 Ballardvale Street, Suite 202
Wilmington, MA 01887

PREPARED FOR
CITY OF HAVERHILL
4 SUMMER STREET
HAVERHILL, MA 01830

REPLACEMENT OF BRANDY BROW ROAD CULVERT OVER EAST MEADOW RIVER

BRANDY BROW ROAD
HAVERHILL, MASSACHUSETTS

REVISIONS

NO.	REVISION	DATE

11/6/2025

DRAWN/DESIGN BY	CHECKED BY
NHG/GBP	GJH

CROSS SECTIONS

SCALE: 1"=4'

NEX-2300100.00

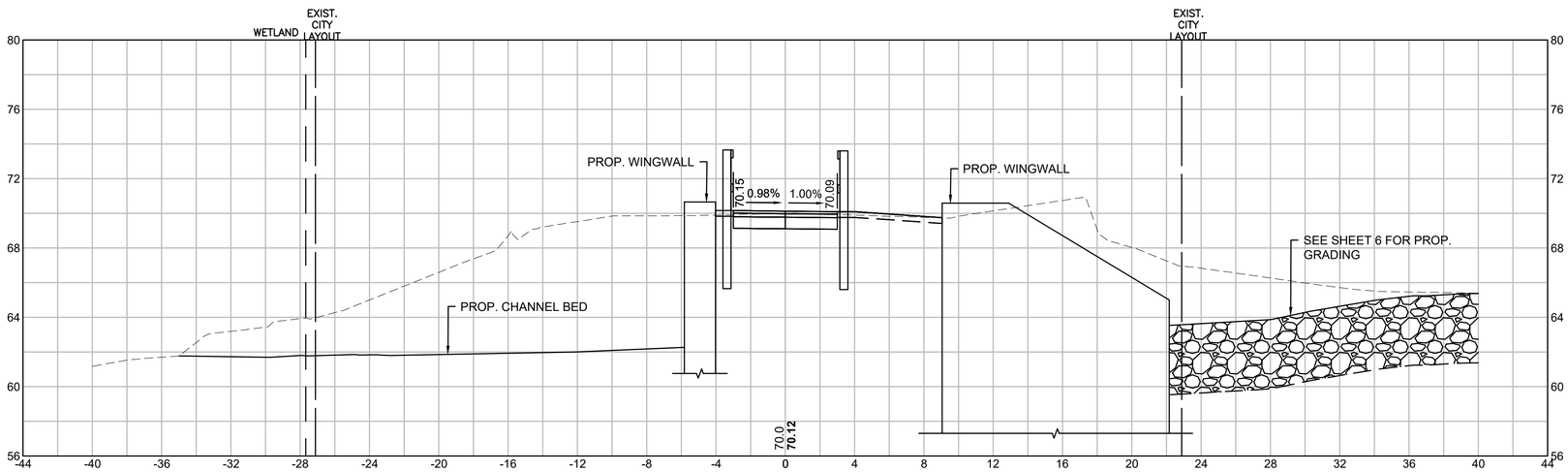

100+75

CUT = 6.77 s.f.

FILL = 0.00 s.f.

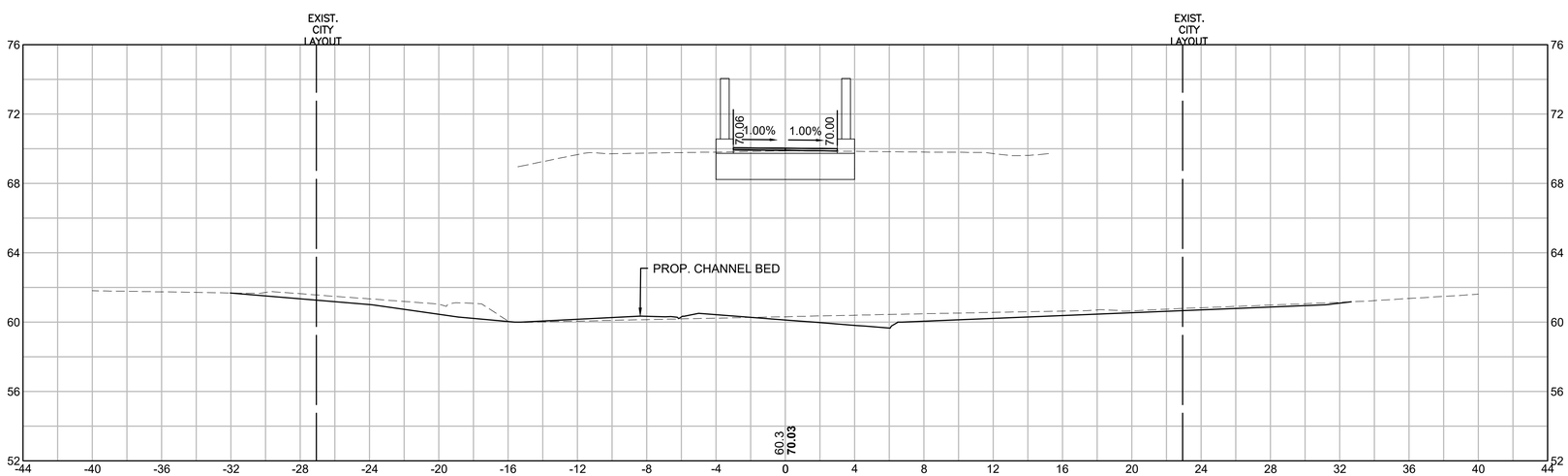

100+56

CUT = 0.00 s.f.

FILL = 0.00 s.f.

HOR. SCALE IN FEET

VER. SCALE IN FEET

2300100.00_HD (XS).DWG 10/14/2024

GPI Engineering Design Planning Construction Inspection
978.570.2999 GPINET.COM
Greenman-Pedersen, Inc.
181 Ballardvale Street, Suite 202
Wilmington, MA 01887

PREPARED FOR
CITY OF HAVERHILL
4 SUMMER STREET
HAVERHILL, MA 01830

REPLACEMENT OF BRANDY BROW ROAD CULVERT OVER EAST MEADOW RIVER

BRANDY BROW ROAD
HAVERHILL, MASSACHUSETTS

REVISIONS

NO.	REVISION	DATE

11/6/2025

DRAWN/DESIGN BY	CHECKED BY
NHG/GBP	GJH

CROSS SECTIONS

SCALE: 1"=4'

NEX-2300100.00

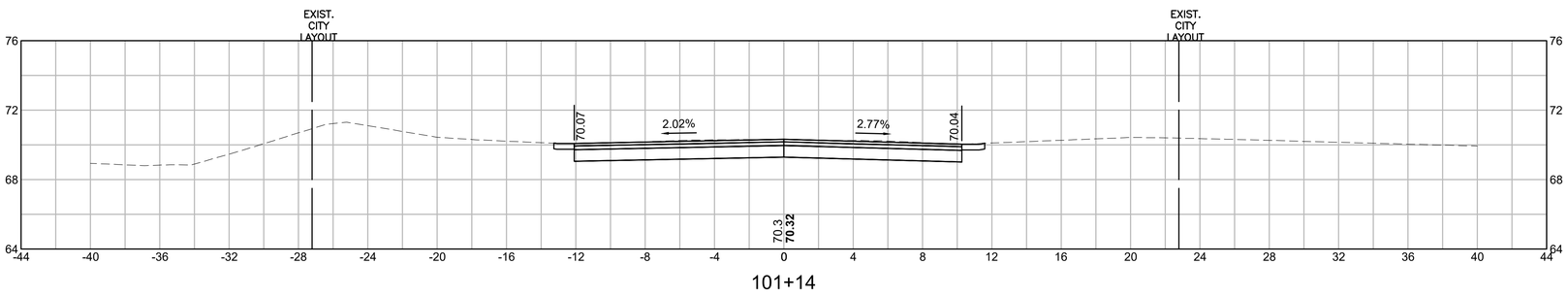

101+14

CUT = 24.33 s.f.

FILL = 0.00 s.f.

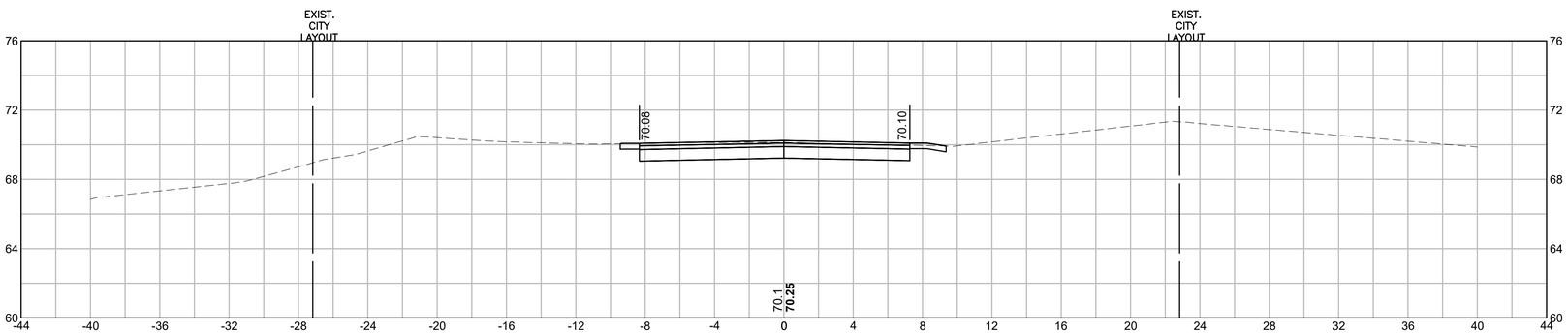

101+00

CUT = 15.51 s.f.

FILL = 0.00 s.f.

HOR. SCALE IN FEET

4 0 4 8

4 0 4 8

VER. SCALE IN FEET

2300100.00_HD (XS).DWG 10/14/2024

GPI Engineering Design Planning Construction Inspection
978.570.2999 GPINET.COM
Greenman-Pedersen, Inc.
181 Ballardvale Street, Suite 202
Wilmington, MA 01887

PREPARED FOR

CITY OF HAVERHILL
4 SUMMER STREET
HAVERHILL, MA 01830

REPLACEMENT OF BRANDY BROW ROAD CULVERT OVER EAST MEADOW RIVER

BRANDY BROW ROAD
HAVERHILL, MASSACHUSETTS

REVISIONS

NO.	REVISION	DATE

11/6/2025

DRAWN/DESIGN BY	CHECKED BY
NHG/GBP	GJH

CROSS SECTIONS

SCALE: 1"=4'

NEX-2300100.00