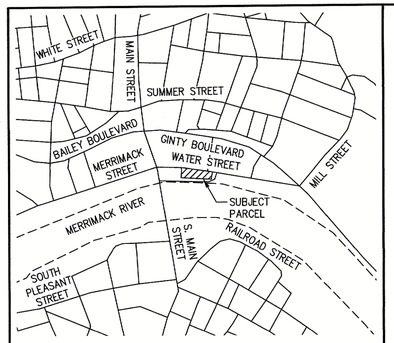

LOCUS MAP
SCALE: 1" = 1,000'

MULTIFAMILY SITE REDEVELOPMENT PLANS

FOR

85 WATER STREET

(ASSESSOR'S MAP 200, BLOCK 4, LOTS 1 & 3 &
ASSESSOR'S MAP 207, BLOCK 2, LOT 1A)

HAVERHILL, MASSACHUSETTS

SCHEDULE OF PLAN SET DRAWINGS:

OWNER:
THE WATER STREET WATERFRONT LLC
5 ATKINSON FARM ROAD
ATKINSON, NH 03811
BOOK 15004, PAGE 358

APPLICANT:
85 WATER STREET REDEVELOPMENT, LLC
231 SUTTON STREET, SUITE 1B
NORTH ANDOVER, MA 01845
PHONE: 978-687-6200

CIVIL ENGINEER/SURVEYOR:
THE MORIN-CAMERON GROUP, INC.
66 ELM STREET
DANVERS, MA 01923

ARCHITECT:
GSD ASSOCIATES, LLC
146 MAIN STREET
NORTH ANDOVER, MA 01845
PHONE: 978-688-5422

ENVIRONMENTAL CONSULTANT:
LEC ENVIRONMENTAL CONSULTANTS, INC.
380 LOWELL STREET
WAKEFIELD, MA 01880
PHONE: 781-245-2500

LANDSCAPE ARCHITECT:
RADNER DESIGN ASSOCIATES, INC.
3 ALLIED DRIVE, SUITE 303
DEDHAM, MA 02026
PHONE: 508-733-6144

ZONING DISTRICT:
WATERFRONT DISTRICT (SOUTH SIDE OF WATER STREET)

ELEVATION DATUM:
NORTH AMERICAN VERTICAL DATUM OF 1988 (NAVD88)

ABBREVIATIONS:

AC	ACRE
APPROX	APPROXIMATE
BC	BOTTOM OF CURB
CB	CATCH BASIN
CCB	CAPE COD BERM
CI	CAST IRON
CLDI	CEMENT LINED DUCTILE IRON
CONC	CONCRETE
CMP	CORRUGATED METAL PIPE
DI	DUCTILE IRON
DIA	DIAMETER
DMH	DRAIN MANHOLE
DB	DEED BOOK
EL/ELEV	ELEVATION
EXIST	EXISTING
FT	FOOT
GG	GAS GATE
HDPE	HIGH DENSITY POLYETHYLENE
ID	INNER DIAMETER
INV	INVERT
MAHW	MEAN ANNUAL HIGH WATER
MAX	MAXIMUM
MIN	MINIMUM
N/F	NOW OR FORMERLY
N,S,E,W	NORTH SOUTH EAST WEST
NAVD	NORTH AMERICAN VERTICAL DATUM
OC	ON CENTER
±	PLUS/MINUS
PAV	PAVED
PG	PAGE
PROP	PROPOSED
PSI	POUNDS PER SQUARE INCH
PVC	POLYVINYL CHLORIDE
R	RADIUS
RCP	REINFORCED CONCRETE PIPE
RET	RETAINING
REQ'D	REQUIRED
SF	SQUARE FEET
SMH	SEWER MANHOLE
SSA	SNOW STORAGE AREA
SWLL	SINGLE WHITE LANE LINE
TC	TOP OF CURB
TOW	TOP OF WALL
TYP	TYPICAL
UGE	UNDERGROUND ELECTRIC
UP	UTILITY POLE
VCG	VERTICAL GRANITE CURB
WG	WATER GATE

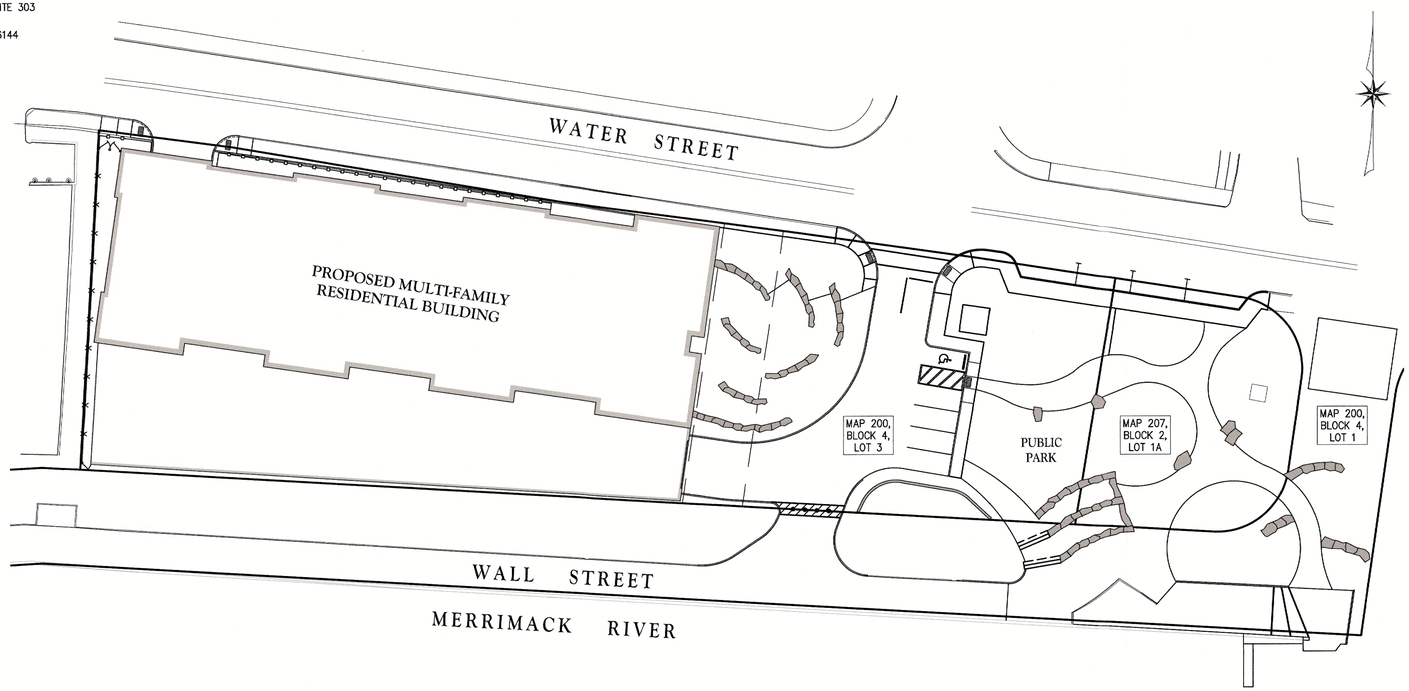

PLAN
SCALE: 1" = 30'
0 15 30 60

LEGEND

	EXISTING	PROPOSED
CONTOURS		
MAJOR	15	12
MINOR	16	18
SPOT GRADES	× 167.2	× 22.4
LIMIT OF MAHW		
LIMIT HISTORIC HIGH WATER		
100' SETBACK TO MAHW		
LIMIT OF 200' RIVERFRONT AREA		
LIMIT OF FEMA FLOOD ZONE		
CHAIN LINK FENCE		
EDGE OF GRASS		
DRAIN PIPE	D	D
GAS MAIN/SERVICE	G	G
PICKET FENCE		
SANITARY SEWER MAIN/SERVICE	S	S
SILT SOCK		
UNDERGROUND ELECTIC CONDUIT	UGE	UGE
WATER MAIN/SERVICE	W	W
CATCH BASIN		
DETECTABLE WARNING PANEL		
DRAIN MANHOLE		
ELECTRIC MANHOLE		
GAS GATE VALVE		
LIGHT POLE		
SEWER MANHOLE		
SIGN		
TELECOM MANHOLE		
TREE		
UTILITY POLE		
WATER GATE VALVE		

FOR PERMITTING PURPOSES ONLY.
NOT RELEASED FOR CONSTRUCTION.

GENERAL NOTE:
THESE PLANS ARE PREPARED FOR PERMITTING WITH THE CITY OF HAVERHILL. THE PLANS SHALL NOT BE USED FOR CONSTRUCTION OR FOR ANY OTHER PURPOSES WITHOUT WRITTEN PERMISSION FROM THE MORIN-CAMERON GROUP, INC.

The Morin-Cameron GROUP, INC.
CIVIL ENGINEERS | ENVIRONMENTAL CONSULTANTS
LAND SURVEYORS | LAND USE PLANNERS
66 ELM STREET, DANVERS, MASSACHUSETTS 01923
P: 978-777-8586, W: WWW.MORINCAMERON.COM

COMMONWEALTH OF MASSACHUSETTS
DANIEL J. POWERS
No. 50839
REGISTERED PROFESSIONAL ENGINEER
6-9-2025

SURVEY BY: OTHERS
DRAFTED BY: D.J.P.
CHECKED BY: S.P.C.
APPROVED BY: D.J.P.
SCALE: AS NOTED
DATE: MARCH 7, 2025

REVISIONS

NO.	DESCRIPTION	DATE
1	REVISE PER PEER REVIEW COMMENTS	5-2-2025
2	REVISE PER 2ND PEER REVIEW COMMENTS	6-2-2025
3	ADD/UPDATE LANDSCAPING FEATURES	6-9-2025

MULTIFAMILY SITE REDEVELOPMENT PLANS
FOR
85 WATER STREET, HAVERHILL, MASSACHUSETTS
(ASSESSOR'S MAP 200, BLOCK 4, LOTS 1 & 3 & ASSESSOR'S MAP 207, BLOCK 2, LOT 1A)
PREPARED FOR:
85 WATER STREET REDEVELOPMENT, LLC

COVERSHEET

DRAWING NO. C-1

PROJ. #3979
DRAWING: 3979_MAIN.DWG

SURVEY NOTES:

1. PROPERTY LINE INFORMATION SHOWN HEREON WAS COMPILED BY THE MORIN–CAMERON GROUP, INC.
2. THE EXISTING CONDITION DEPICTED HEREON IS THE RESULT OF AN ON–THE–GROUND INSTRUMENT SURVEY PERFORMED BY THE MORIN–CAMERON GROUP, INC.
3. EXISTING CONDITIONS SHOWN HEREON WERE SUPPLEMENTED WITH A PLAN ENTITLED "EXISTING CONDITIONS, 85 WATER STREET, HAVERHILL MA" PREPARED BY ALLEN & MAJOR ASSOCIATES, INC. PREPARED APRIL 29, 2003.
4. ELEVATIONS DEPICTED HEREON ARE BASED ON THE NORTH AMERICAN VERTICAL DATUM OF 1988 (NAVD88).

GENERAL NOTE:

THESE PLANS ARE PREPARED FOR OUR CLIENT'S USE ONLY FOR THE PURPOSE OF SITE CONSTRUCTION AND ARE NOT TO BE USED OR RELIED UPON BY OTHERS WITHOUT THE WRITTEN CONSENT OF THE MORIN–CAMERON GROUP, INC.

FLOOD NOTE:

THE SUBJECT PROPERTY IS LOCATED IN A ZONE "AE" (ELEV=22) AND ZONE "X", AS ILLUSTRATED ON THE FLOOD INSURANCE RATE MAP COMMUNITY PANEL NO. 25009C0089H, WHICH HAS A PRELIMINARY EFFECTIVE DATE OF MAY 26, 2023.

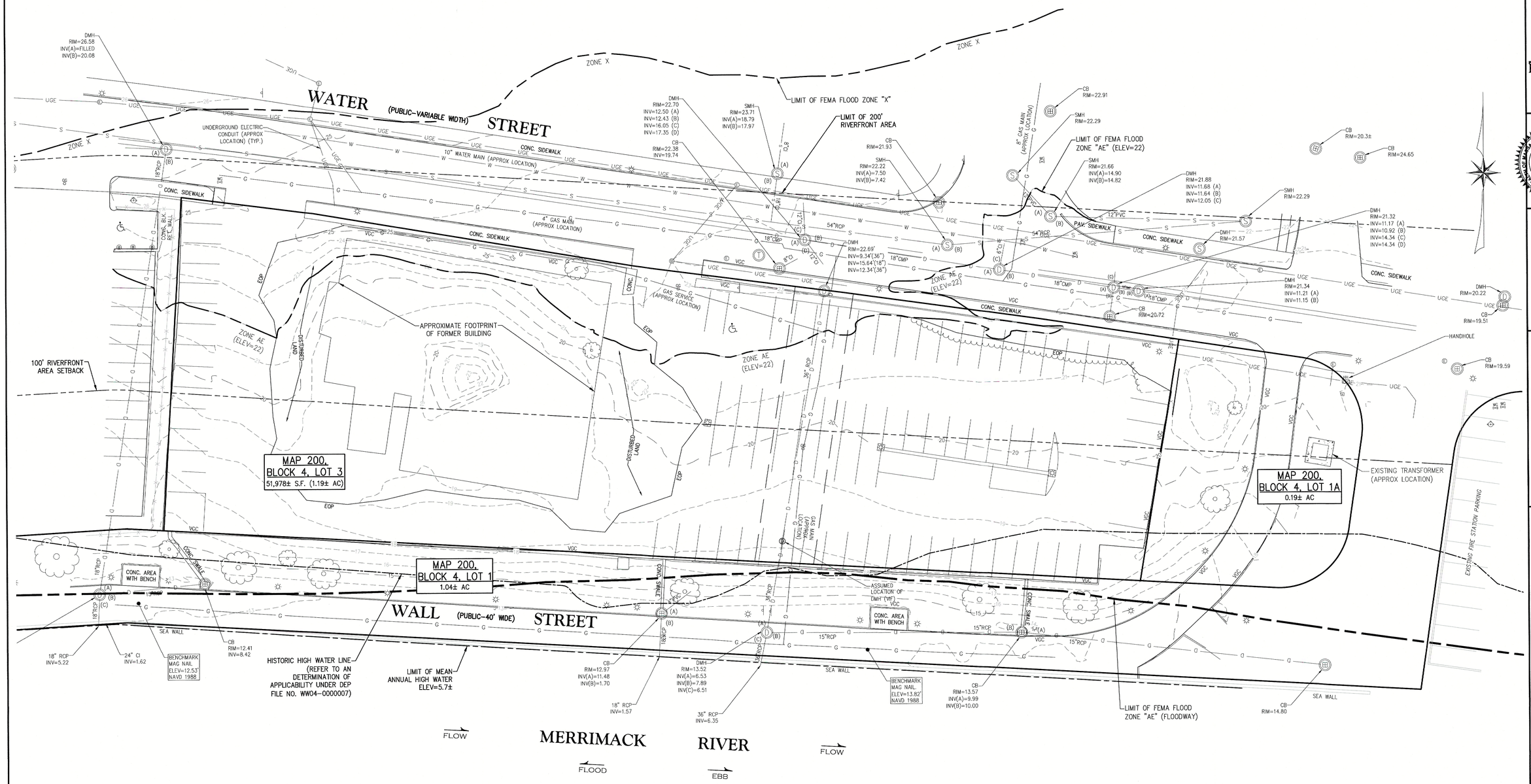

PLAN
SCALE: 1" = 20'
0 10 20 40

The Morin-Cameron GROUP, INC.
CIVIL ENGINEERS | ENVIRONMENTAL CONSULTANTS
LAND SURVEYORS | LAND USE PLANNERS
66 ELM STREET, DANVERS, MASSACHUSETTS 01923
P: 978-777-8566, W: WWW.MORINCAMERON.COM

COMMONWEALTH OF MASSACHUSETTS — DANIEL J. POWERS — No. 56239 — REGISTERED PROFESSIONAL ENGINEER
6-9-2025

SURVEY BY: OTHERS
DRAFTED BY: D.J.P.
CHECKED BY: S.P.C.
APPROVED BY: D.J.P.
SCALE: AS NOTED
DATE: MARCH 7, 2025

REVISIONS

NO.	DESCRIPTION	DATE
1	REVISE PER PEER REVIEW COMMENTS	5–2–2025
2	REVISE PER 2ND PEER REVIEW COMMENTS	6–2–2025
3	ADD/UPDATE LANDSCAPING FEATURES	6–9–2025

MULTIFAMILY SITE REDEVELOPMENT PLANS
FOR
85 WATER STREET, HAVERHILL, MASSACHUSETTS
(ASSESSOR'S MAP 200, BLOCK 4, LOTS 1 & 3 & ASSESSOR'S MAP 207, BLOCK 2, LOT 1A)
PREPARED FOR:
85 WATER STREET REDEVELOPMENT, LLC

EXISTING CONDITIONS PLAN

DRAWING NO. C–2

PROJ. #3979
DRAWING: 3979_MAIN.DWG

CONSTRUCTION SEQUENCE:

TO PREVENT EXCESSIVE EROSION AND SILTING, THE FOLLOWING CONSTRUCTION SEQUENCE COUPLED WITH OTHER WIDELY ACCEPTED PRINCIPALS FOR REDUCING EROSION AND SEDIMENTATION SHALL BE IMPLEMENTED IN THE DEVELOPMENT OF THE SITE.

1. THE CONTRACTOR SHALL COORDINATE A PRE-CONSTRUCTION MEETING AT LEAST 48 HOURS PRIOR TO ANY CONSTRUCTION ACTIVITY WITH THE OWNER (OWNER'S REPRESENTATIVE), CONSERVATION COMMISSION REPRESENTATIVE, PLANNING DEPARTMENT REPRESENTATIVE AND ANY OTHER INTERESTED TOWN DEPARTMENT REPRESENTATIVES.
2. STABILIZATION PRACTICES FOR EROSION AND SEDIMENT CONTROL SHALL BE INSTALLED PRIOR TO COMMENCING CONSTRUCTION ACTIVITIES. PLACE EROSION CONTROLS AT LOCATIONS INDICATED ON THE SITE DEVELOPMENT PLANS.
3. CONSTRUCT STABILIZED CONSTRUCTION ENTRANCE AT THE LOCATION NOTED.
4. ALL CATCH BASINS (EXISTING AND NEWLY INSTALLED) SHALL BE PROTECTED WITH SILT SACK SEDIMENT TRAPS.
5. IN PREPARING TO REMOVE PAVEMENT AND MATERIALS FROM THE WORK AREA ON THE SITE, CAREFUL CONSIDERATION SHOULD BE MADE TO THE EXTENT OF DISTURBANCE SO AS NOT TO DISTURB MORE OF THE SITE THAN WHAT IS INTENDED TO BE IMMEDIATELY DEVELOPED AND RE-STABILIZED.
6. DUE TO LIMITED SPACE AVAILABLE ON THE PREMISE, LOAM AND SOIL EXCAVATED FROM THE WORK AREA SHALL BE HAULED FROM THE PROPERTY AND STOCK PILED AT A LOCATION TO BE DETERMINED BY THE SITE CONTRACTOR. IF MATERIALS ARE STOCKPILED ON THE SITE WHERE THEY WILL NOT INTERFERE WITH CONSTRUCTION ACTIVITIES, THEY SHALL BE LOCATED SO AS TO MINIMIZE THE POTENTIAL FOR EROSION INTO EXISTING DRAINAGE INFRASTRUCTURE. STOCKPILES SHALL BE STABILIZED WITH MULCH SOCK, SILT FENCING OR EQUIVALENT. STOCKPILES LEFT FOR GREATER THAN 14 DAYS SHALL BE SEEDED WITH AN EROSION CONTROL MIX. NO STOCKPILES SHALL BE PLACED WITHIN THE 100' BUFFER ZONE TO THE OFFSITE WETLAND.
7. REMOVAL OF ALL DEBRIS OR MATERIAL FROM THE WORK AREA SHALL BE DISPOSED OF IN ACCORDANCE WITH FEDERAL, STATE, AND LOCAL REGULATIONS UNDER THE OVERSIGHT OF A LICENSED SITE PROFESSIONAL (LSP).
8. REMOVAL OF ALL EXISTING UTILITIES TO BE CUT AND CAPPED, AND COORDINATED WITH APPROPRIATE UTILITY COMPANIES.

EROSION AND SEDIMENTATION CONTROL:

WIDELY ACCEPTED PRACTICES FOR REDUCING EROSION AND SEDIMENTATION WILL BE EMPLOYED IN THE DEVELOPMENT OF THIS SITE. REFER TO THE CONSTRUCTION PERIOD POLLUTION PREVENTION PLAN FOR THE PROJECT.

1. THE DEVELOPMENT OF THE SITE HAS BEEN PLANNED TO MATCH EXISTING TOPOGRAPHY AND GROUND COVER. EXISTING DRAINAGE PATTERNS OF THE SITE HAVE BEEN MAINTAINED TO THE EXTENT PRACTICABLE.
2. STEEP SLOPES SHOULD NOT BE DISTURBED WHERE POSSIBLE.
3. THE CONTRACTOR SHALL MINIMIZE THE AREA OF DISTURBED LAND TO THE EXTENT FEASIBLE.
4. SEDIMENT CONTROL MEASURES WILL BE APPLIED TO CONTROL ANY SEDIMENTS THAT MAY BE PRODUCED AS A RESULT OF SITE CONSTRUCTION ACTIVITIES. EROSION AND DEPOSITION OF SEDIMENT WILL BE CLOSELY MONITORED DURING CONSTRUCTION.
5. TEMPORARY EROSION CONTROL MEASURES WILL INCLUDE, BUT NOT BE LIMITED TO, FILTER FABRIC SILT FENCES, SEEDING AND MULCHING, SEEDED FILTER STRIPS AND SILT SACKS IN CATCH BASINS (EXISTING AND NEWLY INSTALLED).
6. TOPSOIL STRIPPED FROM THE SITE WILL BE STOCKPILED FOR LOAMING AND SEEDING AT LATER CONSTRUCTION STAGES. THE STOCKPILES SHALL BE LOCATED SO AS TO ACT AS TEMPORARY DIVERSIONS, GENERALLY ON AN UPHILL SLOPE.
7. SITE DEVELOPMENT WILL NOT COMMENCE UNTIL ALL TEMPORARY EROSION CONTROL MEASURES ARE IN PLACE. THESE MEASURES SHALL BE EMPLOYED UNTIL FINAL PAVING AND ADEQUATE VEGETATION HAS BEEN ESTABLISHED.
8. THE CONSTRUCTION PHASE MUST COMPLY WITH THE ENVIRONMENTAL PROTECTION AGENCY (EPA) NATIONAL POLLUTANT DISCHARGE ELIMINATION SYSTEM PROTOCOLS. AN EPA NOTICE OF INTENT SHALL BE FILLED OUT AT LEAST 2 WEEKS PRIOR TO THE START OF CONSTRUCTION.
9. NOTIFY THE CITY OF HAVERHILL AT LEAST 48 HOURS PRIOR TO THE START OF CONSTRUCTION.

DIG SAFE
MA – RI – ME – NH – VT
CALL TOLL FREE 1-888-344-7233
UTILITIES UNDERGROUND PLANT DAMAGE PREVENTION SYSTEM

NOTE:
UNDERGROUND UTILITIES SHOWN ON THIS PLAN ARE BASED UPON VISIBLE ABOVE GROUND UTILITIES AND RECORD INFORMATION OF BELOW GROUND UTILITIES AND ARE APPROXIMATE ONLY. CONTRACTOR IS RESPONSIBLE FOR TAKING ALL NECESSARY PRECAUTIONS BEFORE BEGINNING ANY EXCAVATION.

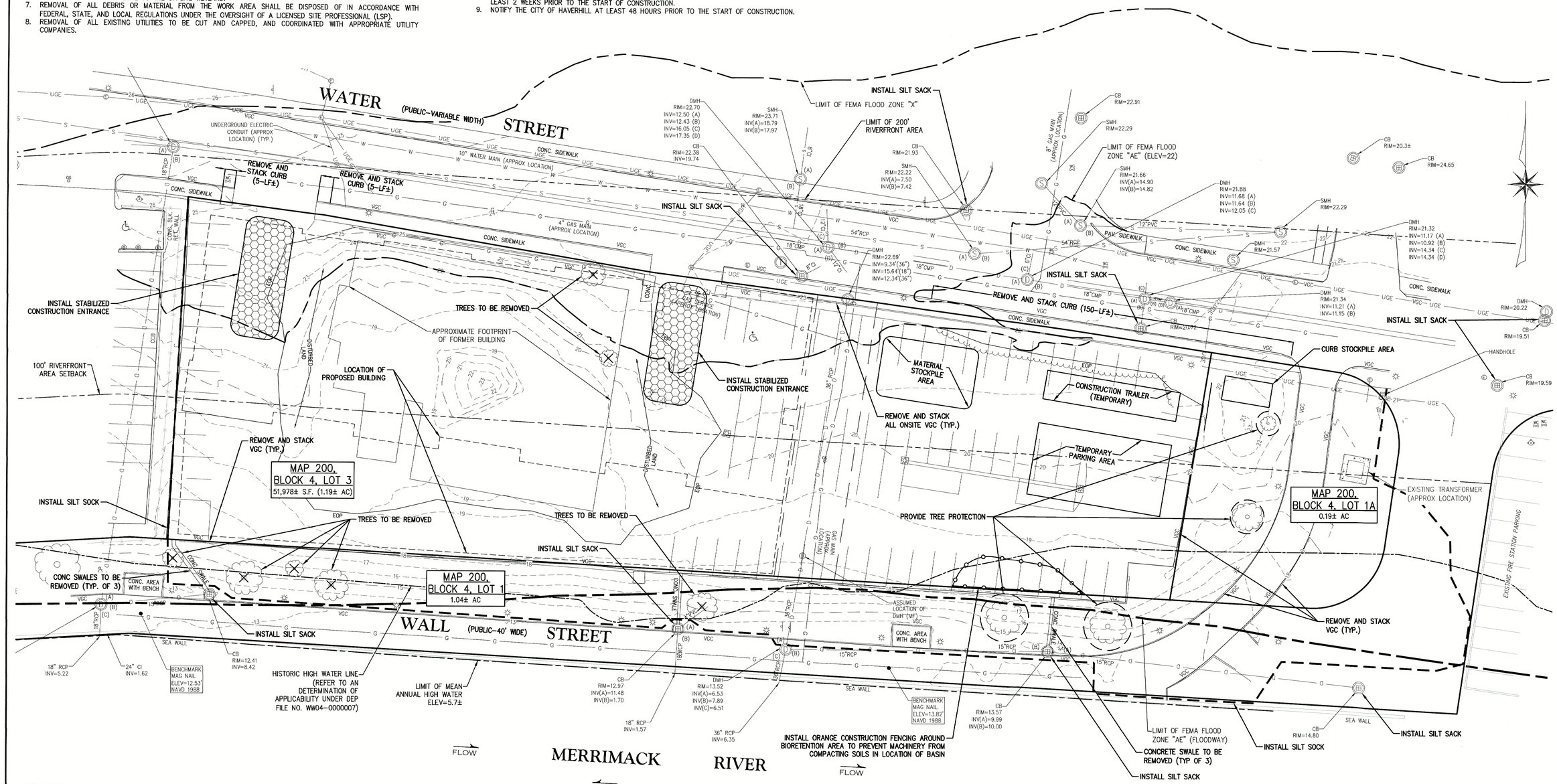

SITE PREPARATION NOTES:

1. THIS PLAN IS INTENDED TO DEPICT EROSION AND SEDIMENTATION CONTROLS AT THE START OF CONSTRUCTION. ADDITIONAL MEASURES WILL BE REQUIRED AND IMPLEMENTED BY THE SITE CONTRACTOR THROUGHOUT THE DURATION OF THE SITE WORK AS REQUIRED.
2. ALL MATERIALS REMOVED FROM THE PREMISES SHALL BE DONE SO IN ACCORDANCE WITH APPLICABLE LOCAL, STATE AND FEDERAL REGULATIONS FOR HAULING AND DISPOSAL.
3. COORDINATE ANY UTILITY DISCONNECTIONS WITH APPROPRIATE SERVICE PROVIDERS.
4. ALL TREES TO REMAIN SHALL BE PROTECTED FROM CONSTRUCTION ACTIVITIES. AVOID HEAVY MACHINERY WITHIN ROOT BALL FOOTPRINT.
5. COORDINATE WITH CITY OF HAVERHILL WATER AND WASTEWATER DIVISION FOR ALL APPLICABLE UTILITY WORK.

GENERAL UTILITY NOTES:

1. THE CONTRACTOR IS SPECIFICALLY CAUTIONED THAT THE LOCATION AND/OR ELEVATION OF EXISTING UTILITIES AND STRUCTURES AS SHOWN ON THESE PLANS IS BASED ON RECORDS OF VARIOUS UTILITY COMPANIES AND WHERE POSSIBLE, MEASUREMENTS TAKEN IN THE FIELD. THIS INFORMATION IS NOT TO BE RELIED UPON AS BEING EXACT OR COMPLETE. THE LOCATION OF ALL UNDERGROUND UTILITIES AND STRUCTURES SHALL BE VERIFIED IN THE FIELD BY THE CONTRACTOR PRIOR TO THE START OF CONSTRUCTION. THE CONTRACTOR MUST CONTACT THE APPROPRIATE UTILITY COMPANY, ANY GOVERNING PERMITTING AUTHORITY, AND "DIGSAFE" AT LEAST 72 HOURS PRIOR TO ANY EXCAVATION WORK TO REQUEST EXACT FIELD LOCATION OF UTILITIES AND THE ENGINEER SHALL BE NOTIFIED IN WRITING OF ANY UTILITIES INTERFERING WITH THE PROPOSED CONSTRUCTION AND APPROPRIATE REMEDIAL ACTION SHALL BE TAKEN BEFORE PROCEEDING WITH THE WORK. IT SHALL BE THE RESPONSIBILITY OF THE CONTRACTOR TO RELOCATE ALL EXISTING UTILITIES WHICH CONFLICT WITH THE PROPOSED IMPROVEMENTS SHOWN ON THE PLAN.
2. THE CONTRACTOR SHALL BE RESPONSIBLE FOR ESTABLISHING AND MAINTAINING ALL CONTROL POINTS AND BENCHMARKS NECESSARY FOR THE WORK.

The Morin-Cameron GROUP, INC.
CIVIL ENGINEERS | ENVIRONMENTAL CONSULTANTS
LAND SURVEYORS | LAND USE PLANNERS
66 ELM STREET, DANVERS, MASSACHUSETTS 01923
P: 978-777-8586, W: WWW.MORINCAMERON.COM

COMMONWEALTH OF MASSACHUSETTS — DANIEL J. POWERS — No. 50039 — REGISTERED PROFESSIONAL ENGINEER
6-9-2025

SURVEY BY: OTHERS
DRAFTED BY: D.J.P.
CHECKED BY: S.P.C.
APPROVED BY: D.J.P.
SCALE: AS NOTED
DATE: MARCH 7, 2025

REVISIONS

NO.	DESCRIPTION	DATE
1	REVISE PER PEER REVIEW COMMENTS	5-2-2025
2	REVISE PER 2ND PEER REVIEW COMMENTS	6-2-2025
3	ADD/UPDATE LANDSCAPING FEATURES	6-9-2025

MULTIFAMILY SITE REDEVELOPMENT PLANS
FOR
85 WATER STREET, HAVERHILL, MASSACHUSETTS
(ASSESSOR'S MAP 200, BLOCK 4, LOTS 1 & 3 & ASSESSOR'S MAP 207, BLOCK 2, LOT 1A)
PREPARED FOR:
85 WATER STREET REDEVELOPMENT, LLC

DEMOLITION & SITE PREPARATION PLAN

DRAWING NO. C-3

PROJ. #3979
DRAWING: 3979_MAIN.DWG

DIMENSIONAL & DENSITY TABLE
WATERFRONT ZONING DISTRICT – SUBZONE D

SETBACK	REQUIRED	PROPOSED
MINIMUM LOT AREA	N/A	51,978 S.F.
MINIMUM LOT FRONTADE	N/A	430.66 FT.
MAXIMUM BUILDING COVERAGE	N/A	58.6%
MINIMUM OPEN SPACE	N/A	66.8%
MINIMUM SIDE YARD	N/A	2.6 FT.
MINIMUM FRONT YARD	N/A	0.7 FT.
MINIMUM REAR YARD	N/A	1.0 FT.
MAXIMUM HEIGHT OF BUILDINGS	74 FT.	70 FT.
MAXIMUM DENSITY	83 UNITS PER ACRE (1)	113 UNITS (2)

FOOTNOTES:
(1) IN SUB-ZONE D, A MAXIMUM OF 70 UNITS PER ACRE SHALL BE PERMITTED WHEN A PROJECT PROVIDES IMPROVED PUBLIC ACCESS TO THE MERRIMACK RIVER AND A PUBLIC PARK. THE SIZE AND DESIGN OF THE PARK MUST BE APPROVED BY THE ECONOMIC DEVELOPMENT DIRECTOR (SEE 255-165.A)
(2) WAIVER REQUIRED

PARKING CALCULATION:

REQUIRED:

	# OF UNITS	REQUIRED SPACES
RESIDENTIAL MULTI-FAMILY 1 PER DWELLING UNIT	113	113

PROPOSED:
124 REGULAR GARAGE PARKING SPACES
8 COMPACT GARAGE PARKING SPACES
22 MOTORCYCLE GARAGE PARKING SPACES
5 PUBLIC PARKING SPACES

NOTE: SEE ARCHITECTURAL PLANS FOR GARAGE LAYOUT

DWELLING UNIT COUNT:

UNIT TYPE	UNIT COUNT
STUDIO	49
1-BEDROOM	50
2-BEDROOM	14
TOTAL UNITS:	113
TOTAL BEDROOMS:	127

RESOURCE AREA CALCULATIONS:

- TOTAL RIVERFRONT AREA = 86,004 SF±
- 0'-100' RIVERFRONT AREA = 52,853 SF±
- 100'-200' RIVERFRONT AREA = 33,151 SF±
- TOTAL PREVIOUSLY DEGRADED RIVERFRONT AREA = 64,327 SF±
- 0'-100' EXISTING DEGRADED AREA = 36,186 SF±
- 100'-200' EXISTING DEGRADED AREA = 28,142 SF±
- 0'-100' PROPOSED DEGRADED AREA = 31,911 SF±
- 100'-200' PROPOSED DEGRADED AREA = 23,620 SF±

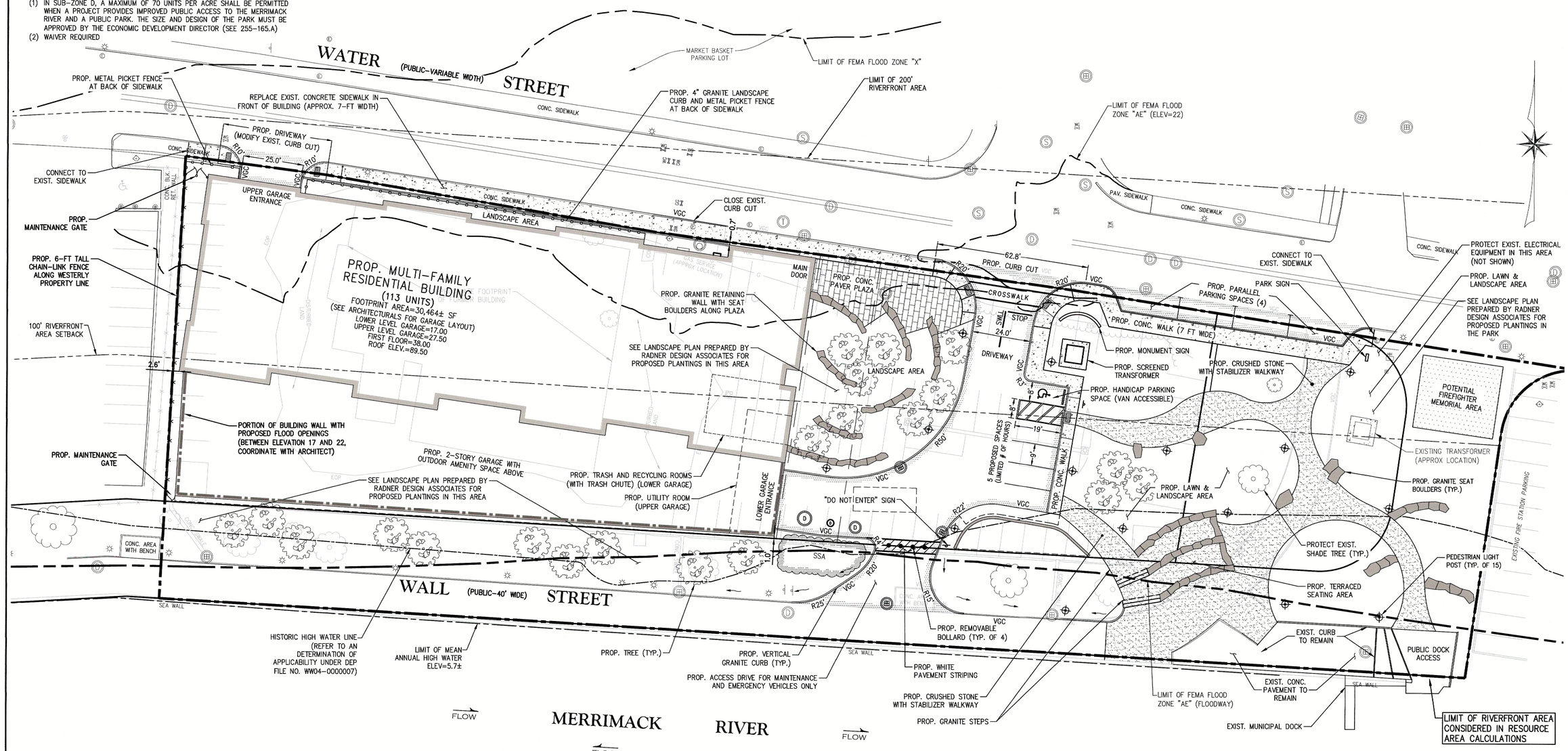

PLAN
SCALE: 1" = 20'
0 10 20 40

The Morin-Cameron GROUP, INC.
CIVIL ENGINEERS | ENVIRONMENTAL CONSULTANTS
LAND SURVEYORS | LAND USE PLANNERS
66 ELM STREET, DANVERS, MASSACHUSETTS 01923
P: 978-777-8586, W: WWW.MORINCAMERON.COM

COMMONWEALTH OF MASSACHUSETTS DANIEL J. POWERS CIVIL No. 56039 REGISTERED PROFESSIONAL ENGINEER
2025-6-9

SURVEY BY: OTHERS
DRAFTED BY: D.J.P.
CHECKED BY: S.P.C.
APPROVED BY: D.J.P.
SCALE: AS NOTED
DATE: MARCH 7, 2025

REVISIONS

NO.	DESCRIPTION	DATE
1	REVISE PER PEER REVIEW COMMENTS	5-2-2025
2	REVISE PER 2ND PEER REVIEW COMMENTS	6-2-2025
3	ADD/UPDATE LANDSCAPING FEATURES	6-9-2025

MULTIFAMILY SITE REDEVELOPMENT PLANS
FOR
85 WATER STREET, HAVERHILL, MASSACHUSETTS
(ASSESSOR'S MAP 200, BLOCK 4, LOTS 1 & 3 & ASSESSOR'S MAP 207, BLOCK 2, LOT 1A)
PREPARED FOR:
85 WATER STREET REDEVELOPMENT, LLC

SITE LAYOUT PLAN
DRAWING NO. C-4

PROJ. #3979
DRAWING: 3979_MAIN.DWG

SEWER NOTES:

1. A MINIMUM OF 10 FEET CLEAR HORIZONTALLY SHALL BE MAINTAINED BETWEEN SANITARY SEWER PIPES AND WATER PIPES. WHENEVER CONDITIONS PREVENT A LATERAL SEPARATION OF 10 FEET TO A WATER PIPE, THE WATER PIPE SHALL BE SLEEVED FOR A DISTANCE OF AT LEAST 10' ON EACH SIDE.
2. ALL GRAVITY SEWER PIPE SHALL BE POLYVINYL CHLORIDE (PVC) SDR-35 UNLESS OTHERWISE NOTED.
3. WHERE SANITARY SEWERS CROSS WATER SERVICES, THE SEWER SHALL BE LAID AT SUCH AN ELEVATION THAT THE CROWN OF THE SEWER IS AT LEAST 18 INCHES BELOW THE INVERT OF THE WATER PIPE. IF THE ELEVATION OF THE SEWER CANNOT BE VARIED TO MEET THIS REQUIREMENT, THE WATER PIPE SHALL BE RELOCATED TO PROVIDE THIS SEPARATION OR CONSTRUCTED WITH MECHANICAL-JOINT PIPE FOR A DISTANCE OF 10 FEET ON EACH SIDE OF THE SEWER. ONE FULL LENGTH OF WATER PIPE SHALL BE CENTERED OVER THE SEWER SO THAT BOTH JOINTS WILL BE AS FAR FROM THE SEWER AS POSSIBLE. WHENEVER IT IS IMPOSSIBLE TO OBTAIN VERTICAL SEPARATION AS STIPULATED ABOVE, BOTH THE WATER PIPE AND THE SEWER PIPE SHALL BE ENCASED IN CONCRETE FOR A MINIMUM DISTANCE OF 10 FEET FROM THE CROSSING POINT OF THE OTHER PIPE AS MEASURED NORMALLY FROM ALL POINTS ALONG THE PIPE.
4. SANITARY SEWER LINES WITH LESS THAN 5 FEET OF COVER SHALL BE INSULATED TO PREVENT FREEZING.
5. A VALVE SHALL BE INSTALLED IN THE GARAGE FLOOR DARIN SYSTEM PRIOR TO THE SEPARATOR TO PREVENT FLOOD WATER FROM ENTERING THE SANITARY SEWER SYSTEM. THIS WILL BE COORDINATED WITH THE ARCHITECT AND MEP ENGINEER PRIOR TO CONSTRUCTION. THE VALVE SHOULD BE PAIRED WITH AN AUDIBLE AND VISUAL ALARM INSIDE THE GARAGE, WHICH WILL BE TRIGGERED PRIOR TO FLOOD WATER RISING TO ELEVATION 17 AND ENTERING THE GARAGE.

WATER NOTES:

1. WATER SERVICE CONNECTIONS SHALL HAVE A MIN. 5' OF COVER TO PREVENT FREEZING.
2. WATER SERVICE CONNECTIONS SHALL BE COORDINATED WITH THE HAVERHILL DEPARTMENT OF PUBLIC WORKS WATER DIVISION. PROVIDE 48 HOURS ADVANCE NOTICE TO SCHEDULE INSPECTIONS.
3. COORDINATE TEMPORARY HYDRANT CONNECTIONS DURING CONSTRUCTION WITH HAVERHILL DEPARTMENT OF PUBLIC WORKS WATER DIVISION.

STORM MANAGEMENT SYSTEM NOTES:

1. STORMWATER CONVEYANCE PIPES SHALL BE HDPE (ADS N-12) PIPE UNLESS NOTED OTHERWISE.
2. BACKFILL SHALL BE COMPACTED TO 95% MAXIMUM DRY DENSITY BY AASHTO T-180D METHOD.
3. SHEETING, IF USED, SHALL BE REMOVED PRIOR TO BACKFILLING TRENCH.
4. UNSUITABLE SOIL (CLAY, ORGANICS, DEBRIS, ETC) BELOW THE INVERT SHALL BE REMOVED AND REPLACED WITH APPROVED MATERIAL AND SHALL NOT BE USED AS BACKFILL.
5. ROOF DRAINS SHALL BE DIRECTED TO THE DRAINAGE SYSTEM IN THE LOCATIONS SHOWN. COORDINATE LOCATIONS WITH THE PROJECT ARCHITECT AND LANDSCAPE ARCHITECT.

BORDERING LAND SUBJECT TO FLOODING COMPENSATORY FLOOD STORAGE CALCULATIONS

CONTOUR ELEVATION	EXISTING AREA (SF)	PROPOSED AREA (SF)	CONTOUR ELEVATION	EXISTING FLOOD STORAGE (CF)	PROPOSED FLOOD STORAGE (CF)	FLOOD STORAGE CHANGE (CF)
13	627	627				
			13–14	3,501	3,524	+23
14	7,681	7,742				
			14–15	9,398	9,458	+60
15	11,226	11,423				
			15–16	12,610	13,090	+480
16	14,046	15,430				
			16–17	15,413	18,233	+2,820
17	16,821	22,239				
			17–18	18,955	35,167	+16,212
18	21,173	50,401				
			18–19	30,086	52,180	+22,094
19	39,987	54,988				
			19–20	45,115	56,328	+11,213
20	50,445	58,684				
			20–21	54,906	60,248	+5,342
21	59,492	62,832				
			21–22	63,266	63,976	+710
22	67,117	66,130				
		TOTAL:		253,250	312,204	+58,954

NOTES:
1. CALCULATIONS ASSUME 80% OPEN SPACE IN LOWER GARAGE FOR ELEVATIONS 18–22. ELEVATIONS BELOW 17 ARE BENEATH THE GARAGE SLAB AND DO NOT INCLUDE ANY ADDITIONAL BUILDING AREA IN THE CALCULATION. ELEVATION 17 IS EXCLUDED DUE TO THE SLOPE OF THE GARAGE.
2. VOLUME AVAILABLE WITHIN SNOW STORAGE AREA WAS REMOVED FROM THE CALCULATION FOR THE PROPOSED FLOOD STORAGE VOLUME.

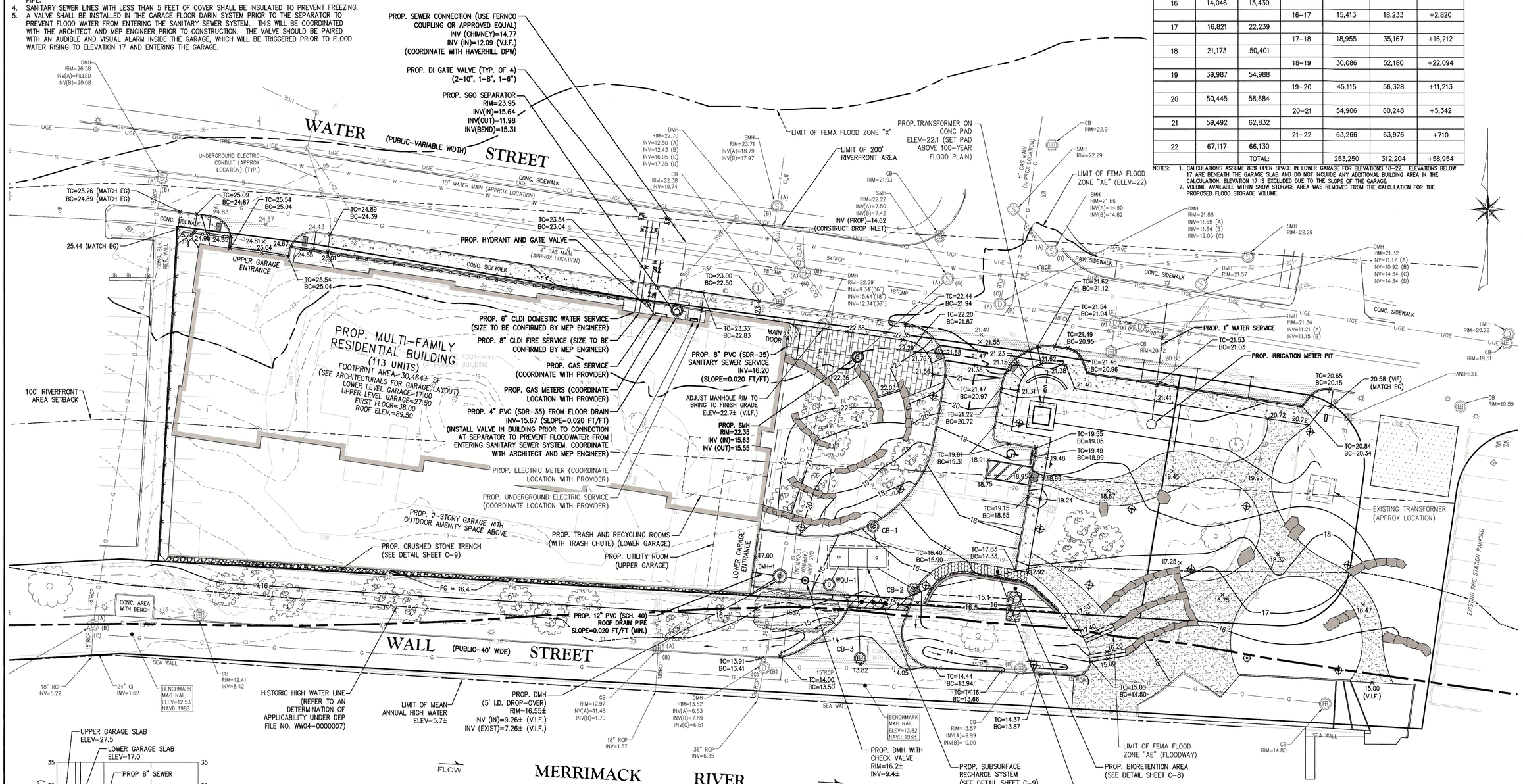

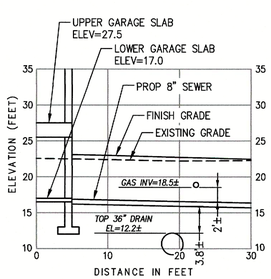

PROPOSED CROSS-SECTION
SCALE: 1"=10'

GENERAL UTILITY NOTES:

1. THE CONTRACTOR IS SPECIFICALLY CAUTIONED THAT THE LOCATION AND/OR ELEVATION OF EXISTING UTILITIES AND STRUCTURES AS SHOWN ON THESE PLANS IS BASED ON RECORDS OF VARIOUS UTILITY COMPANIES AND WHERE POSSIBLE, MEASUREMENTS TAKEN IN THE FIELD. THIS INFORMATION IS NOT TO BE RELIED UPON AS BEING EXACT OR COMPLETE. THE LOCATION OF ALL UNDERGROUND UTILITIES AND STRUCTURES SHALL BE VERIFIED IN THE FIELD BY THE CONTRACTOR PRIOR TO THE START OF CONSTRUCTION. THE CONTRACTOR MUST CONTACT THE APPROPRIATE UTILITY COMPANY, ANY GOVERNING PERMITTING AUTHORITY, AND "DIGSAFE" AT LEAST 72 HOURS PRIOR TO ANY EXCAVATION WORK TO REQUEST EXACT FIELD LOCATION OF UTILITIES AND THE ENGINEER SHALL BE NOTIFIED IN WRITING OF ANY UTILITIES INTERFERING WITH THE PROPOSED CONSTRUCTION AND APPROPRIATE REMEDIAL ACTION SHALL BE TAKEN BEFORE PROCEEDING WITH THE WORK. IT SHALL BE THE RESPONSIBILITY OF THE CONTRACTOR TO RELOCATE ALL EXISTING UTILITIES WHICH CONFLICT WITH THE PROPOSED IMPROVEMENTS SHOWN ON THE PLAN.
2. THE CONTRACTOR SHALL BE RESPONSIBLE FOR ESTABLISHING AND MAINTAINING ALL CONTROL POINTS AND BENCHMARKS NECESSARY FOR THE WORK.

PLAN
SCALE: 1" = 20'
0 10 20 40

SOIL TESTING NOTE:

TEST PITS SHALL BE PERFORMED IN THE VICINITY OF EACH OF THE THE PROPOSED STORMWATER SYSTEMS PRIOR TO CONSTRUCTION ACTIVITIES BY A LICENSED SOIL EVALUATOR TO VERIFY DEPTH TO THE ESTIMATED SEASONAL HIGH WATER TABLE AND PARENT SOIL CONDITIONS. THE TEST PIT INFORMATION SHALL BE PROVIDED TO THE DESIGN ENGINEER TO VERIFY THAT THE SYSTEMS WILL FUNCTION AS INTENDED OR IF CHANGES ARE REQUIRED TO THE SYSTEMS.

DRAIN PIPE SCHEDULE

UPSTREAM STRUCTURE	DOWNSTREAM STRUCTURE	PIPE RIM (US)	PIPE INVERT (US)	PIPE INVERT (DS)	PIPE LENGTH (FT)	PIPE DIA (IN)	PIPE SLOPE (FT/FT)	NOTES
CB-1	RS-1	16.27	10.08	10.00	8	12	0.010	
CB-2	RS-1	15.43	10.16	10.00	16	12	0.010	
CB-3	RS-1	13.85	10.37	10.00	37	12	0.010	
RS-1	WQU-1	---	11.83	11.50	7	8	0.047	
WQU-1	DMH-1	15.67	9.60	9.26	17	12	0.020	PVC (SCH 40)
ROOF DRAIN	DMH-1	---	9.44	9.26	9	12	0.020	PVC
STONE TRENCH	DMH-1	---	15.40	12.95	12	6	0.213	PVC

The Morin-Cameron GROUP, INC.
CIVIL ENGINEERS | ENVIRONMENTAL CONSULTANTS
LAND SURVEYORS | LAND USE PLANNERS
86 ELM STREET, DANVERS, MASSACHUSETTS 01923
P: 978-777-8586, W: WWW.MORINCAMERON.COM

COMMONWEALTH OF MASSACHUSETTS — DANIEL J. POVEDA — CIVIL — No. 56033 — REGISTERED PROFESSIONAL ENGINEER — 6-9-2025

SURVEY BY: OTHERS
DRAFTED BY: D.J.P.
CHECKED BY: S.P.C.
APPROVED BY: D.J.P.
SCALE: AS NOTED
DATE: MARCH 7, 2025

REVISIONS

NO.	DESCRIPTION	DATE
1	REVISE PER PEER REVIEW COMMENTS	5-2-2025
2	REVISE PER 2ND PEER REVIEW COMMENTS	6-2-2025
3	ADD/UPDATE LANDSCAPING FEATURES	6-9-2025

MULTIFAMILY SITE REDEVELOPMENT PLANS

FOR

85 WATER STREET, HAVERHILL, MASSACHUSETTS

(ASSESSOR'S MAP 200, BLOCK 4, LOTS 1 & 3 & ASSESSOR'S MAP 207, BLOCK 2, LOT 1A)

PREPARED FOR:

85 WATER STREET REDEVELOPMENT, LLC

GRADING, DRAINAGE & UTILITY PLAN

DRAWING NO. C-5

PROJ. #3979
DRAWING: 3979_MAIN.DWG

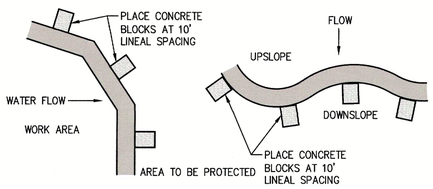

FILTREXX SILTSOXX PLAN VIEW

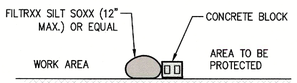

FILTREXX SILTSOXX SECTION

SILT SOCK ON PAVEMENT
NOT TO SCALE

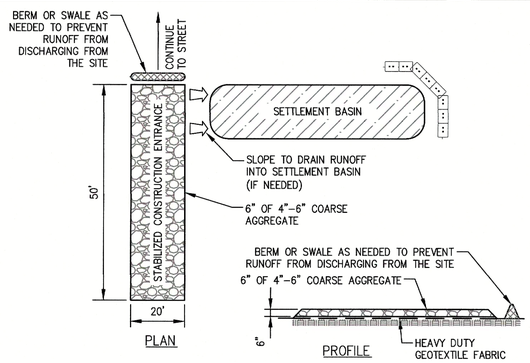

SITE CONSTRUCTION EXIT SPECIFICATIONS
1. STONE FOR STABILIZATION CONSTRUCTION ENTRANCE SHALL BE 4"–6" STONE,
2. THE LENGTH OF THE STABILIZED ENTRANCE SHALL NOT BE LESS THAN 40 FEET.
3. THE WIDTH OF THE ENTRANCE SHALL BE NO LESS THAN THE WIDTH OF THE INGRESS OR EGRESS DRIVE, OR 16 FEET, WHICHEVER IS GREATER.
4. GEOTEXTILE FILTER FABRIC SHALL BE PLACED OVER THE ENTIRE AREA PRIOR TO PLACING STONE.
5. ALL SURFACE WATER THAT IS FLOWING TO OR DIVERTED TOWARDS THE CONSTRUCTION ENTRANCE SHALL BE PIPED BENEATH THE ENTRANCE. IF PIPING IS IMPRACTICAL, A BERM WITH MINIMUM 1 TO 5 SLOPES THAT CAN BE CROSSED BY VEHICLES CAN BE SUBSTITUTED.
6. THE ENTRANCE SHALL BE MAINTAINED IN A CONDITION THAT WILL PREVENT TRACKING OR FLOWING OF SEDIMENT ONTO RIGHTS OF WAY. THIS MAY REQUIRE PERIODIC TOPDRESSING WITH ADDITIONAL STONE AS CONDITIONS DEMAND AND REPAIR AND/OR CLEANOUT OF ANY MEASURES USED TO TRAP SEDIMENT. SEDIMENT SPILLED, WASHED OR TRACKED ONTO THE RIGHT OF WAY MUST BE REMOVED IMMEDIATELY.

STABILIZED CONSTRUCTION ENTRANCE DETAIL
(NOT TO SCALE)

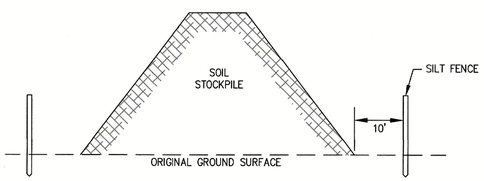

NOTES:
1. SILT FENCE TO EXTEND AROUND ENTIRE PERIMETER OF STOCKPILE IF ON LEVEL GROUND OR TO EXTEND AROUND DOWNGRADIENT PORTION STOCKPILE IS ON SLOPE.
2. IF THE STOCKPILE IS TO REMAIN FOR MORE THAN 14 DAYS IT SHALL BE STABILIZED WITH AN EROSION CONTROL BLANKET OR SEEDED (IF LOAM).
3. INSPECTION OF SILT FENCES SHALL BE AT LEAST ONCE PER WEEK AND AFTER RAIN EVENTS IN EXCESS OF 1/2". REPAIR OR REPLACEMENT OF SILT FENCE SHALL BE MADE PROMPTLY AS NEEDED.
4. SEDIMENT TRAPPED BY SILT FENCES SHALL BE REMOVED AND PROPERLY DISPOSED OF WHEN SEDIMENT DEPTH REACHES 12".
5. SILT FENCES SHALL BE MAINTAINED UNTIL STOCKPILE IS ELIMINATED.
6. STOCKPILE SHALL BE COVERED BY AT LEAST 1 LAYER OF 6-MIL POLYETHYLENE SHEETING WHEN NOT IN USE. SHEETING SHALL BE SECURED AT THE END OF EACH WORKDAY.

TEMPORARY SOIL STOCKPILE
(NOT TO SCALE)

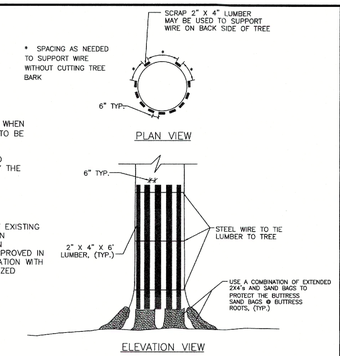

NOTES:
1. THIS TREE BUMPER DETAIL SHALL BE USED WHEN WORKING WITHIN 10' OF AN EXISTING TREE TO BE PROTECTED.
2. ALL TREES SHALL BE SAVED UNLESS NOTED OTHERWISE ON THE PLANS OR DIRECTED BY THE ENGINEER.
3. LUMBER, WIRE, AND SANDBAGS MAY BE REUSED FOR OTHER TREES.
4. THE INTENT OF THIS DETAIL IS TO PROTECT EXISTING TREES FROM DAMAGE DURING CONSTRUCTION ESPECIALLY FROM BACKHOE ARM SWING. AN ALTERNATE APPROACH MAY BE USED IF APPROVED IN WRITING BY THE ENGINEER AFTER CONSULTATION WITH THE TOWN ARBORIST OR HIS DULY AUTHORIZED REPRESENTATIVE.

TREE PROTECTION DETAIL
(NOT TO SCALE)

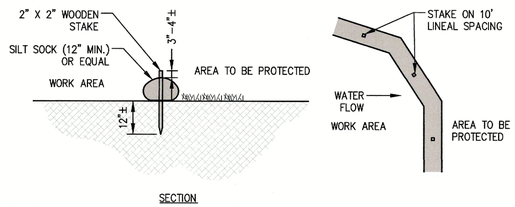

SILT SOCK
(NOT TO SCALE)

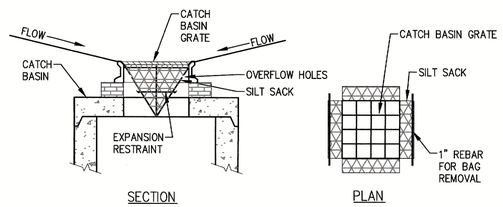

NOTES:
1. INSTALL SILT SACKS IN ALL EXISTING CATCH BASINS WITHIN 100' OF THE LIMIT OF WORK. INSTALL SILT SACKS IN NEW CATCH BASINS AFTER INSTALLATION.
2. GRATES TO BE PLACED OVER SILT SACKS.
3. SEE SHEET 3 FOR FURTHER MAINTENANCE INFORMATION.

SILT SACK SEDIMENT TRAP
(NOT TO SCALE)

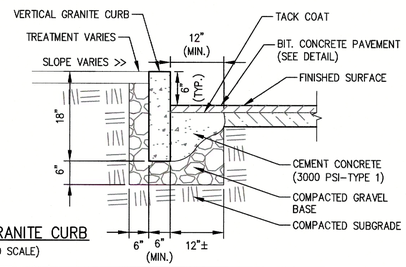

VERTICAL GRANITE CURB
(NOT TO SCALE)

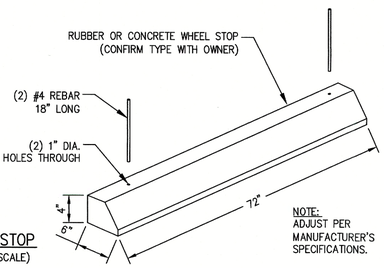

NOTE:
ADJUST PER MANUFACTURER'S SPECIFICATIONS.

WHEEL STOP
(NOT TO SCALE)

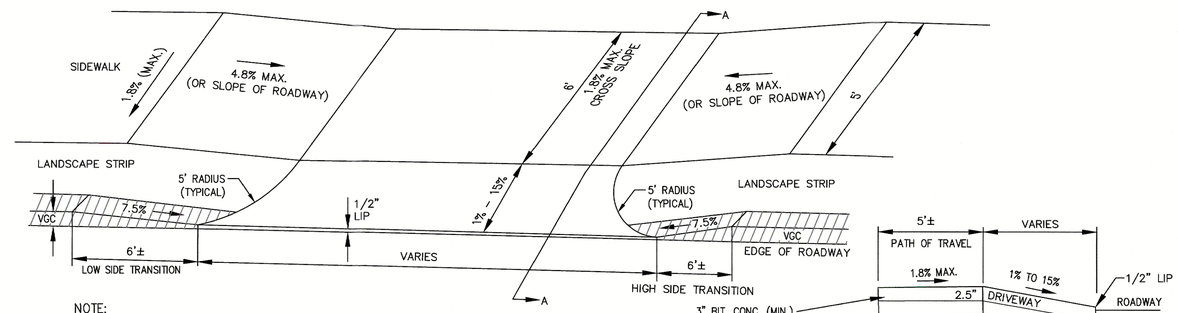

NOTE:
APPLICABLE ONLY TO DRIVEWAYS WITH SIDEWALK CROSSINGS.

DRIVEWAY APRON DETAIL
NOT TO SCALE

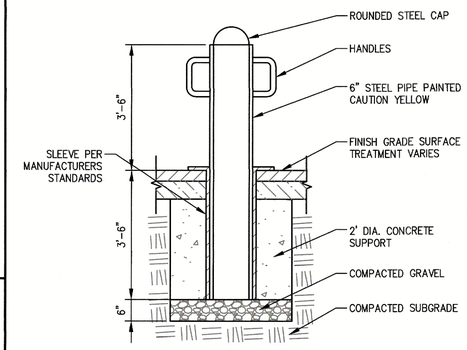

REMOVABLE BOLLARD
(NOT TO SCALE)

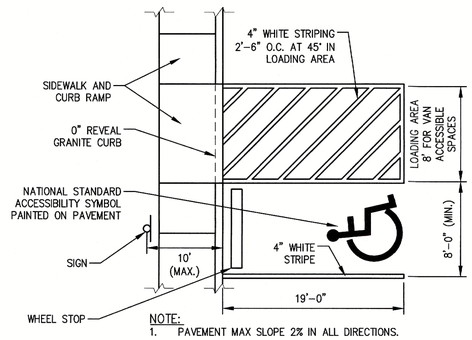

NOTE:
1. PAVEMENT MAX SLOPE 2% IN ALL DIRECTIONS.

VAN ACCESSIBLE PARKING SPACE
(NOT TO SCALE)

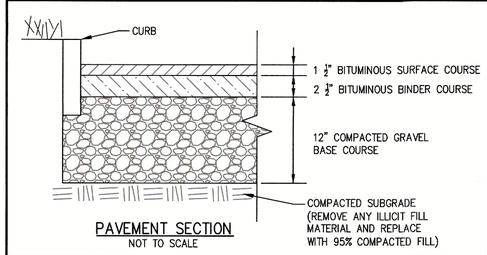

PAVEMENT SECTION
NOT TO SCALE

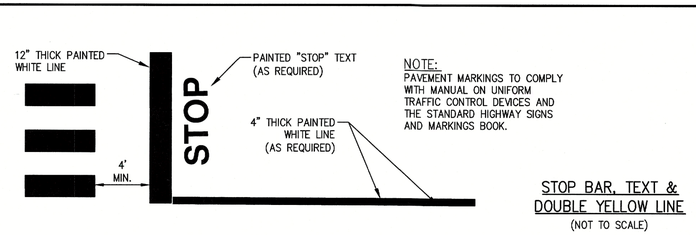

NOTE:
PAVEMENT MARKINGS TO COMPLY WITH MANUAL ON UNIFORM TRAFFIC CONTROL DEVICES AND THE STANDARD HIGHWAY SIGNS AND MARKINGS BOOK.

STOP BAR, TEXT & DOUBLE YELLOW LINE
(NOT TO SCALE)

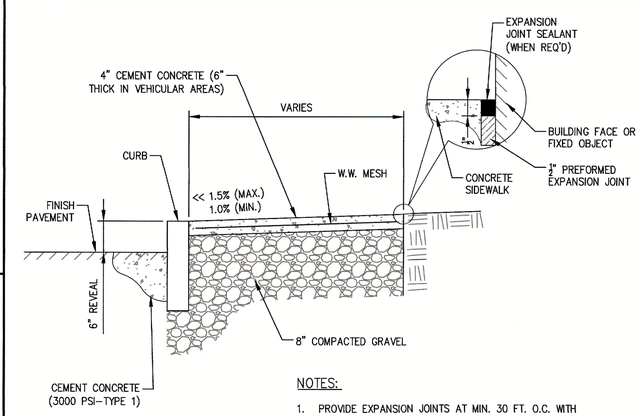

NOTES:
1. PROVIDE EXPANSION JOINTS AT MIN. 30 FT. O.C. WITH PRE-MOLDED JOINT FILLER.
2. PROVIDE CONTROL JOINTS AR 6' O.C.
3. PROVIDE BROOM FINISH IN DIRECTION PERPENDICULAR TO CURB.
4. CEMENT CONCRETE SHALL BE 4,000 PSI–TYPE II.

CONCRETE SIDEWALK
NOT TO SCALE

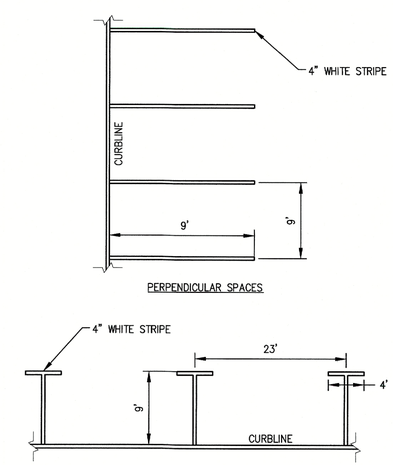

PARKING SPACE STRIPING
(NOT TO SCALE)

The Morin-Cameron GROUP, INC.
CIVIL ENGINEERS | ENVIRONMENTAL CONSULTANTS
LAND SURVEYORS | LAND USE PLANNERS
66 ELM STREET, DANVERS, MASSACHUSETTS 01923
P: 978-777-8586, W: WWW.MORINCAMERON.COM

COMMONWEALTH OF MASSACHUSETTS — DANIEL S. POWERS — CIVIL — No. 54639 — REGISTERED PROFESSIONAL ENGINEER
6-9-2025

SURVEY BY: OTHERS
DRAFTED BY: D.J.P.
CHECKED BY: S.P.C.
APPROVED BY: D.J.P.
SCALE: AS NOTED
DATE: MARCH 7, 2025

REVISIONS

NO.	DESCRIPTION	DATE
1	REVISE PER PEER REVIEW COMMENTS	5-2-2025
2	REVISE PER 2ND PEER REVIEW COMMENTS	6-2-2025
3	ADD/UPDATE LANDSCAPING FEATURES	6-9-2025

MULTIFAMILY SITE REDEVELOPMENT PLANS
FOR
85 WATER STREET, HAVERHILL, MASSACHUSETTS
(ASSESSOR'S MAP 200, BLOCK 4, LOTS 1 & 3 & ASSESSOR'S MAP 207, BLOCK 2, LOT 1A)
PREPARED FOR:
85 WATER STREET REDEVELOPMENT, LLC

CONSTRUCTION DETAILS I

DRAWING NO. C-6

PROJ. #3979
DRAWING: 3979_MAIN.DWG

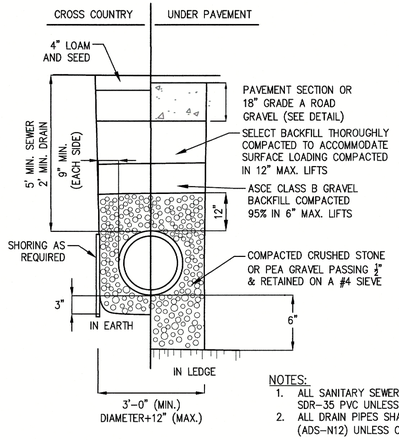

NOTES:
1. ALL SANITARY SEWER MAINS SHALL BE SDR-35 PVC UNLESS OTHERWISE NOTED.
2. ALL DRAIN PIPES SHALL BE HDPE (ADS-N12) UNLESS OTHERWISE NOTED

TYPICAL SEWER AND DRAIN TRENCH DETAIL
(NOT TO SCALE)

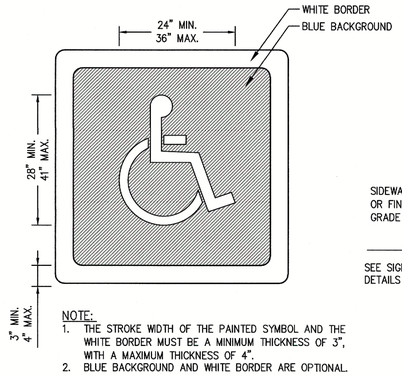

NOTE:
1. THE STROKE WIDTH OF THE PAINTED SYMBOL AND THE WHITE BORDER MUST BE A MINIMUM THICKNESS OF 3", WITH A MAXIMUM THICKNESS OF 4".
2. BLUE BACKGROUND AND WHITE BORDER ARE OPTIONAL.

INTERNATIONAL ACCESSIBILITY PARKING SPACE SYMBOL
(NOT TO SCALE)

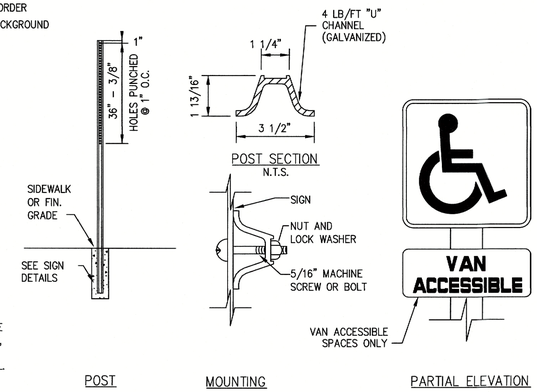

ACCESSIBLE PARKING SPACE SIGN
(NOT TO SCALE)

M.U.T.C.D. LEGEND	WIDTH	HEIGHT	SYMBOL
R1-1	36"	36"	STOP
R5-1	36"	36"	DO NOT ENTER
R5-11	30"	24"	AUTHORIZED VEHICLES ONLY

SIGN LEGEND
(NOT TO SCALE)

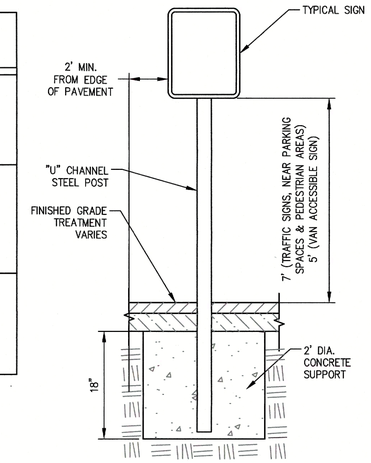

SIGN POST
(NOT TO SCALE)

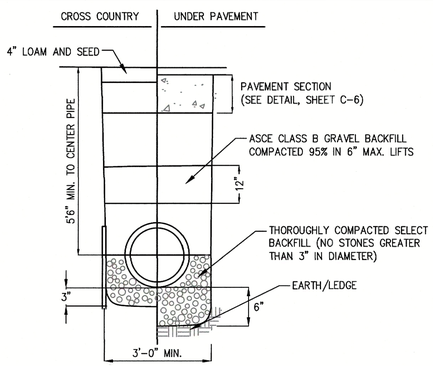

TYPICAL WATER TRENCH DETAIL
(NOT TO SCALE)

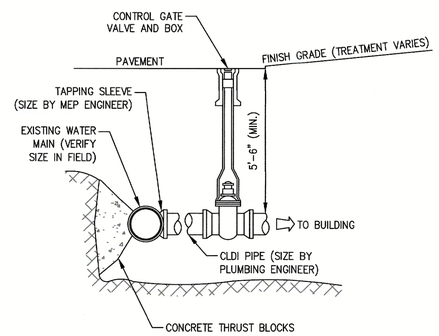

TAPPING SLEEVE & GATE VALVE DETAIL
NOT TO SCALE

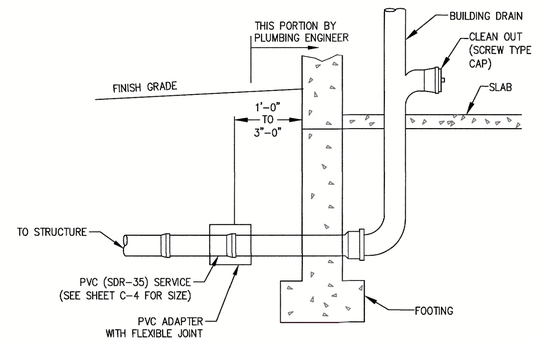

TYPICAL BUILDING SEWER SERVICE BELOW SLAB
NOT TO SCALE

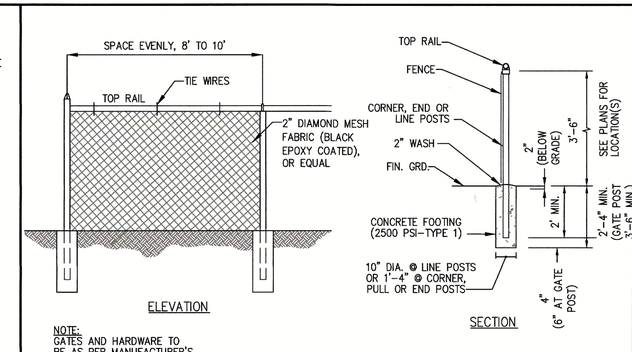

NOTE:
GATES AND HARDWARE TO BE AS PER MANUFACTURER'S SPECIFICATION.

CHAIN LINK FENCE (OR EQUAL)
NOT TO SCALE

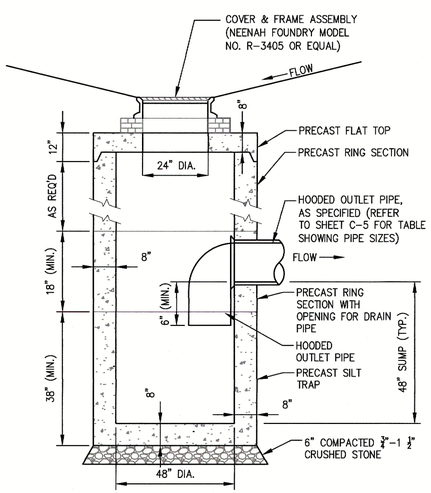

TYPICAL CATCH BASIN
(NOT TO SCALE)

INLET SIZE	D	A	B
4"	4'-0"ø	3'-0"	2'-6"

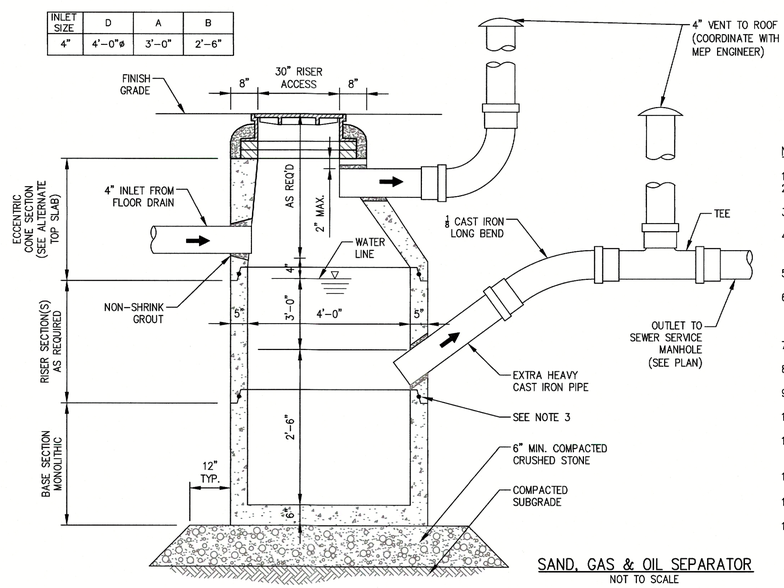

SAND, GAS & OIL SEPARATOR
NOT TO SCALE

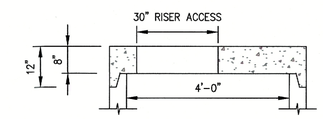

ALTERNATE TOP SLAB
(STEEL REINFORCED FOR H-20 LOADING)

NOTES:
1. ALL SECTIONS SHALL BE DESIGNED FOR HS-20 LOADING.
2. ALL EXTERIOR SURFACES SHALL BE GIVEN TWO COATS OF BITUMINOUS WATERPROOFING MATERIAL.
3. JOINT SEALANT BETWEEN PRECAST SECTIONS SHALL BE PERFORMED BUTYL RUBBER.
4. STANDARD SEWER MANHOLE FRAME AND COVER SHALL BE SET IN FULL MORTAR BED. ADJUST TO GRADE WITH CLAY BRICK AND MORTAR (2 BRICK COURSES TYPICALLY, 5 BRICK COURSES MAX).
5. STRUCTURE TO BE LOCATED OUTSIDE OF BUILDING WHERE POSSIBLE, COVER TO HAVE A CENTER HOLE.
6. GAS, SAND & OIL SEPARATOR CONSTRUCTION SHALL CONFORM TO 248 CMR: BOARD OF STATE EXAMINERS OF PLUMBERS AND GAS FITTER'S FUEL GAS AND PLUMBING CODE AND APPLICABLE TOWN OF DANVERS REGULATIONS.
7. THE STRUCTURE SHALL BE SO LOCATED AND CONSTRUCTED THAT SURFACE WATER SHALL BE EXCLUDED.
8. INLET PIPE SHALL BE AT LEAST FOUR INCHES ABOVE NORMAL WATER LINE.
9. WHERE SUBJECT TO FROST OR CRUSHING CONDITIONS, OUTLET SHALL BE AT LEAST THREE FEET BELOW THE SURFACE.
10. THE GSO MUST BE FILLED WITH CLEAN WATER BEFORE USING AND AFTER BEING EMPTIED FOR PERIODIC CLEANING.
11. ALL OIL AND GASOLINE MUST BE REMOVED BEFORE CLEANING OUT THE BASIN AND MUST NOT BE DISCHARGED INTO THE SEWER THROUGH OTHER FIXTURES.
12. SPECIFICATIONS FOR COVERING SPECIAL CASES OR CONDITIONS SHALL BE APPROVED BY THE LOCAL AUTHORITIES.
13. BOTH VENTS SHALL BE EXTENDED INDEPENDENTLY 15" ABOVE THE ROOF OR AS APPROVED BY THE LOCAL AUTHORITIES.
14. ALL PIPING AND VENT MATERIAL TO BE EXTRA HEAVY CAST IRON OR DUCTILE IRON.

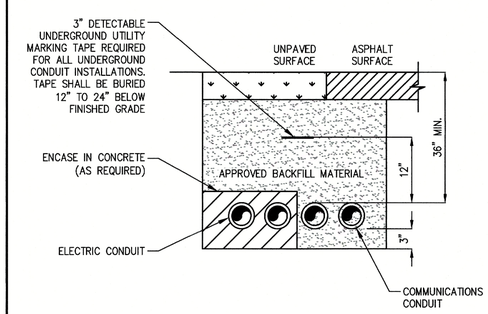

ELECTRICAL CONDUIT TRENCH DETAIL NOTES:
1. ADJUST FOR ANY LOCAL MODIFICATIONS TO NFPA 70/NEC
2. COORDINATE CONDUITS WITH APPLICABLE SERVICE PROVIDERS.
3. TEST PITS SHALL BE PERFORMED PRIOR TO CONSTRUCTION TO CONFIRM EXISTING UTILITIES.

ELECTRIC AND COMMUNICATION CONDUIT TRENCH DETAIL
(NOT TO SCALE)

The Morin-Cameron GROUP, INC.
CIVIL ENGINEERS | ENVIRONMENTAL CONSULTANTS
LAND SURVEYORS | LAND USE PLANNERS
86 ELM STREET, DANVERS, MASSACHUSETTS 01923
P: 978-777-8586, W: WWW.MORINCAMERON.COM

COMMONWEALTH OF MASSACHUSETTS — DANIEL J. POWERS — CIVIL — No. 50039 — REGISTERED PROFESSIONAL ENGINEER
6-9-2025

SURVEY BY: OTHERS
DRAFTED BY: D.J.P.
CHECKED BY: S.P.C.
APPROVED BY: D.J.P.
SCALE: AS NOTED
DATE: MARCH 7, 2025

REVISIONS

NO.	DESCRIPTION	DATE
1	REVISE PER PEER REVIEW COMMENTS	5-2-2025
2	REVISE PER 2ND PEER REVIEW COMMENTS	6-2-2025
3	ADD/UPDATE LANDSCAPING FEATURES	6-9-2025

MULTIFAMILY SITE REDEVELOPMENT PLANS
FOR
85 WATER STREET, HAVERHILL, MASSACHUSETTS
(ASSESSOR'S MAP 200, BLOCK 4, LOTS 1 & 3 & ASSESSOR'S MAP 207, BLOCK 2, LOT 1A)
PREPARED FOR:
85 WATER STREET REDEVELOPMENT, LLC

CONSTRUCTION DETAILS II

DRAWING NO. C-7

PROJ. #3979
DRAWING: 3979_MAIN.DWG

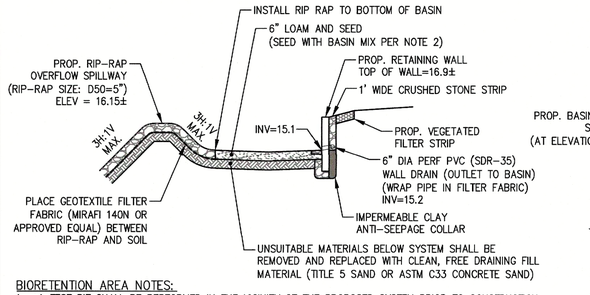

BIORETENTION AREA NOTES:

1. A TEST PIT SHALL BE PERFORMED IN THE VICINITY OF THE PROPOSED SYSTEM PRIOR TO CONSTRUCTION ACTIVITIES BY A LICENSED SOIL EVALUATOR TO VERIFY DEPTH TO THE ESTIMATED SEASONAL HIGH WATER TABLE AND PARENT SOIL CONDITIONS. THE TEST PIT INFORMATION SHALL BE PROVIDED TO THE DESIGN ENGINEER TO VERIFY THE SYSTEM WILL FUNCTION AS INTENDED OR IF CHANGES ARE REQUIRED TO THE SYSTEM.
2. BASIN SHALL BE DEMARCATED WITH CONSTRUCTION FENCE PRIOR TO CONSTRUCTION ACTIVITIES AND CARE SHALL BE TAKEN TO AVOID COMPACTION OF THE AREA. THE ROUGH GRADED BIORETENTION AREA MAY BE USED AS A TEMPORARY SEDIMENTATION BASIN DURING CONSTRUCTION. REMOVE ALL ACCUMULATED SEDIMENT FROM WITHIN BASIN AREA PRIOR TO PLACEMENT OF FINAL SOIL MIX AND SEED. PROTECT WITH EROSION CONTROL METHODS UNTIL STABILIZED.
3. SEED AREAS WITHIN THE BIORETENTION AREA WITH ERNST SEED MIX – ERNMX-126 (OR APPROVED EQUAL). MAY REQUIRE ADDITIONAL SLOPE STABILIZATION WHILE VEGETATION BECOMES ESTABLISHED TO PREVENT EROSION. A 6" (MIN.) LAYER OF TOPSOIL SHOULD BE USED. COMPOSITION MEETS THE REQUIRED SPECIFICATIONS.
4. AFTER EXCAVATION FOR THE AREA A BOTTOM OF BED INSPECTION SHALL BE PERFORMED TO VERIFY SOIL CONDITIONS WITHIN THE LIMIT OF THE BASIN.

BIORETENTION AREA CROSS SECTION
(NOT TO SCALE)

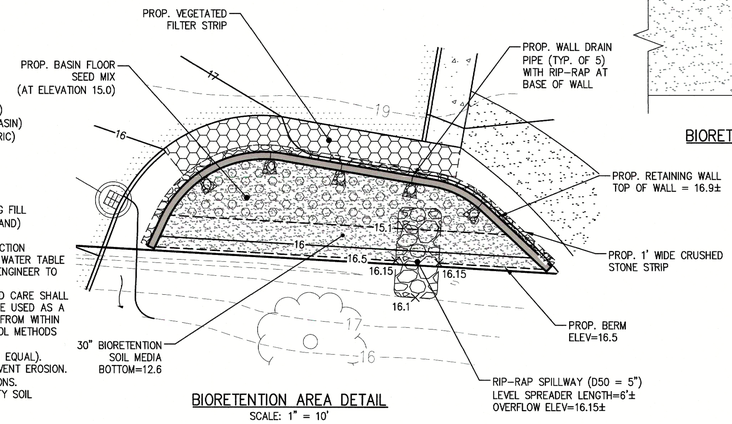

BIORETENTION AREA DETAIL
SCALE: 1" = 10'

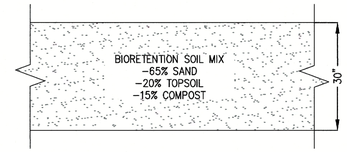

BIORETENTION AREA SOIL MIX
NOT TO SCALE

NOTE:
A SIEVE ANALYSIS OF THE SOIL SHALL BE PERFORMED AND PROVIDED TO THE DESIGN ENGINEER TO VERIFY THE SOIL COMPOSITION MEETS THE REQUIRED SPECIFICATIONS.

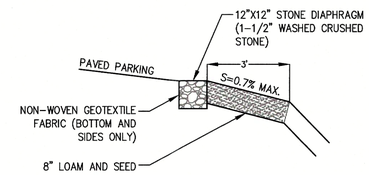

VEGETATED FILTER STRIP DETAIL
(NOT TO SCALE)

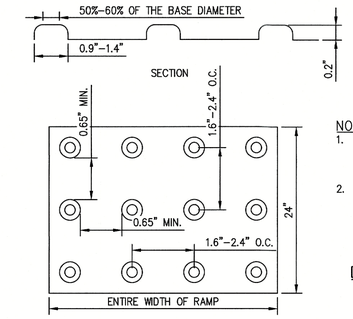

NOTES:

1. PANEL SHALL BE PERMANENTLY APPLIED TO THE RAMP OR OTHER SURFACE IN ACCORDANCE WITH THE MANUFACTURER'S SPECIFICATIONS.
2. PANEL COLOR SHALL CONTRAST VISUALLY WITH ADJACENT WALKING SURFACES EITHER LIGHT-ON-DARK OR DARK-ON-LIGHT.

DETECTABLE WARNING PAD
(NOT TO SCALE)

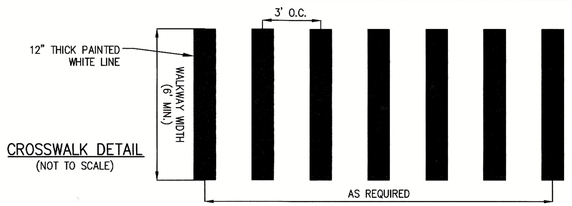

CROSSWALK DETAIL
(NOT TO SCALE)

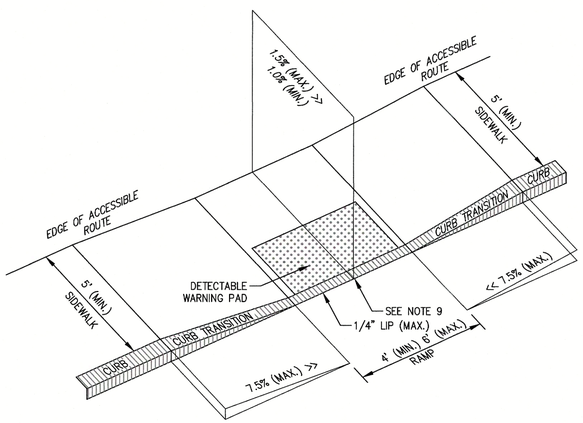

TYPE A

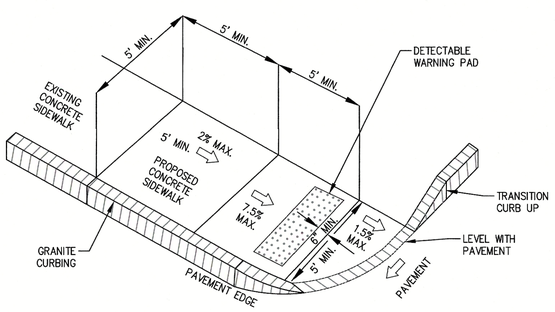

TYPE B

NOTES:

1. THE MAXIMUM ALLOWABLE SIDEWALK AND CURB RAMP CROSS SLOPES SHALL BE 1.5% (1% MIN.).
2. THE MAXIMUM ALLOWABLE SLOPE OF ACCESSIBLE ROUTE EXCLUDING CURB RAMPS SHALL BE 5%.
3. THE MAXIMUM ALLOWABLE SLOPE OF ACCESSIBLE ROUTE CURB RAMPS SHALL BE 7.5%.
4. A MINIMUM OF 3 FEET CLEAR SHALL BE MAINTAINED AT ANY PERMANENT OBSTACLE IN ACCESSIBLE ROUTE (I.E., HYDRANTS, UTILITY POLES, TREE WELLS, SIGNS, ETC.)
5. CURB TREATMENT VARIES, SEE PLANS FOR CURB TYPE.
6. BASE OF RAMP SHALL BE GRADED TO PREVENT PONDING.
7. SEE TYPICAL SIDEWALK SECTION FOR RAMP CONSTRUCTION.
8. WHERE ACCESSIBLE ROUTES ARE LESS THAN 5' IN WIDTH (EXCLUDING CURBING) A 5' x 5' PASSING AREA SHALL BE PROVIDED AT INTERVALS NOT TO EXCEED 200 FEET.
9. ELIMINATE ALL CURBING AT RAMP (OTHER THAN VERTICAL CURBING, WHICH SHALL BE SET FLUSH) WHERE IT ABUTS ROADWAY.

HANDICAP ACCESS RAMP DETAILS
(NOT TO SCALE)

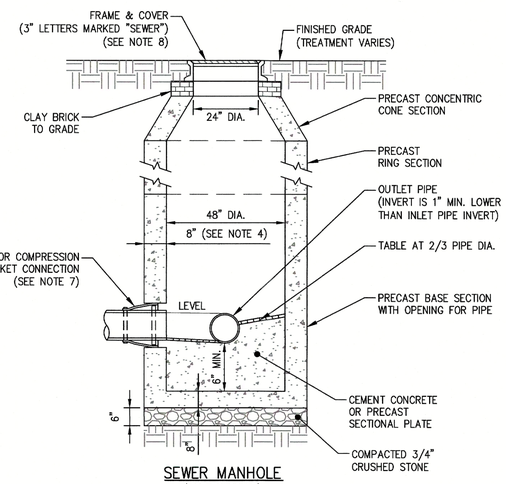

SEWER MANHOLE
(NOT TO SCALE)

NOTES:

1. MANHOLE SHALL COMPLY WITH ASTM C478.
2. CONCRETE SHALL BE 4,000 PSI MIN.
3. MANHOLE SHALL BE DESIGNED FOR AASHTO HS-20 LOADING.
4. TOP SLAB OR ECCENTRIC CONE MAY BE USED.
5. SIZE SECTIONS AS REQUIRED.
6. USE BUTYL RESIN JOINTS COMPLYING WITH ASTM C990.
7. COAT MANHOLE & BOOT CONNECTION STAINLESS STEEL CLAMPS WITH ASPHALTIC BITUMASTIC COATING.
8. STRUCTURES SHALL HAVE BOLT DOWN COVERS AND BE WATERTIGHT. BOLT DOWN COVERS & FRAMES SHALL BE HELD SECURELY TOGETHER BY BOLTING TO THREADED HOLES IN THE FRAME OR TO NUTS OR TUMBLER DEVICES SECURED BY THE FRAME, BY USE OF HOOKS ATTACHED TO THE COVER OR BY ANOTHER APPROVED MEANS. LOCKING MECHANISMS THAT CAN ONLY BE OPENED WITH KEYS OR SPECIAL TOOLS MAY NOT BE USED.

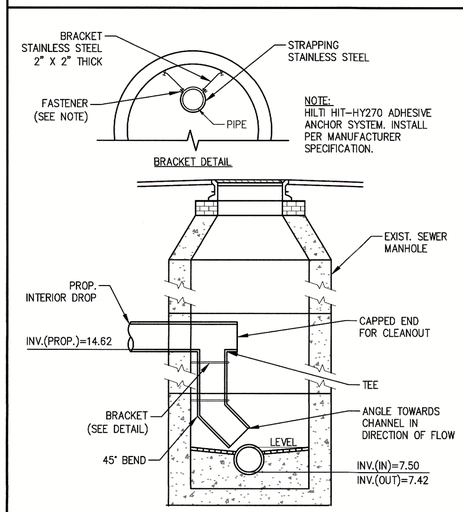

NOTE:
HILTI HIT-HY270 ADHESIVE ANCHOR SYSTEM. INSTALL PER MANUFACTURER SPECIFICATION.

EXISTING INTERIOR DROP SEWER MANHOLE RETROFIT
(NOT TO SCALE)

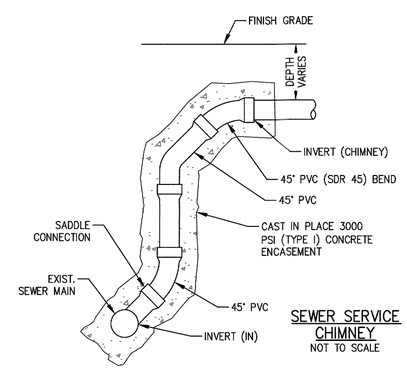

SEWER SERVICE CHIMNEY
NOT TO SCALE

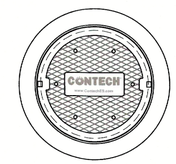

FRAME AND COVER
(DIAMETER VARIES)
N.T.S.

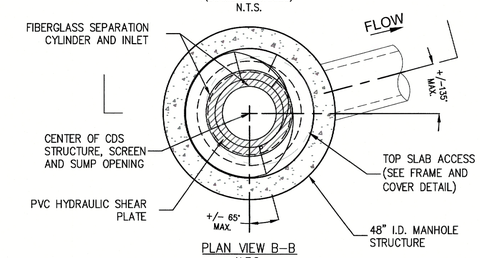

PLAN VIEW B-B
N.T.S.

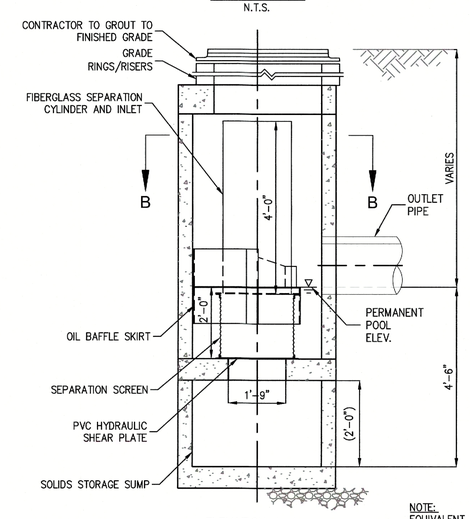

ELEVATION A-A
N.T.S.

NOTE:
EQUIVALENT TREATMENT STRUCTURE MAY BE SUBSTITUTED APPROVAL BY DESIGN ENGINEER

CDS 1515-4-C DETAIL
(WQU-1)
N.T.S.

The Morin-Cameron GROUP, INC.
CIVIL ENGINEERS | ENVIRONMENTAL CONSULTANTS
LAND SURVEYORS | LAND USE PLANNERS
18 Ayer Road, Harvard, Massachusetts 01451
P: 978-777-8588, W: WWW.MORINCAMERON.COM

COMMONWEALTH OF MASSACHUSETTS REGISTERED PROFESSIONAL ENGINEER DANIEL J. POWERS CIVIL No. 38615
6-2-2025

SURVEY BY:	OTHERS
DRAFTED BY:	D.J.P.
CHECKED BY:	S.P.C.
APPROVED BY:	D.J.P.
SCALE:	AS NOTED
DATE:	MARCH 7, 2025

REVISIONS

NO.	DESCRIPTION	DATE
1	REVISE PER PEER REVIEW COMMENTS	5-2-2025
2	REVISE PER 2ND PEER REVIEW COMMENTS	6-2-2025
3	ADD/UPDATE LANDSCAPING FEATURES	6-9-2025

MULTIFAMILY SITE REDEVELOPMENT PLANS
FOR
85 WATER STREET, HAVERHILL, MASSACHUSETTS
(ASSESSOR'S MAP 200, BLOCK 4, LOTS 1 & 3 & ASSESSOR'S MAP 207, BLOCK 2, LOT 1A)
PREPARED FOR:
85 WATER STREET REDEVELOPMENT, LLC

CONSTRUCTION DETAILS III

DRAWING NO. C-8

PROJ. #3979
DRAWING: 3979_MAIN.DWG

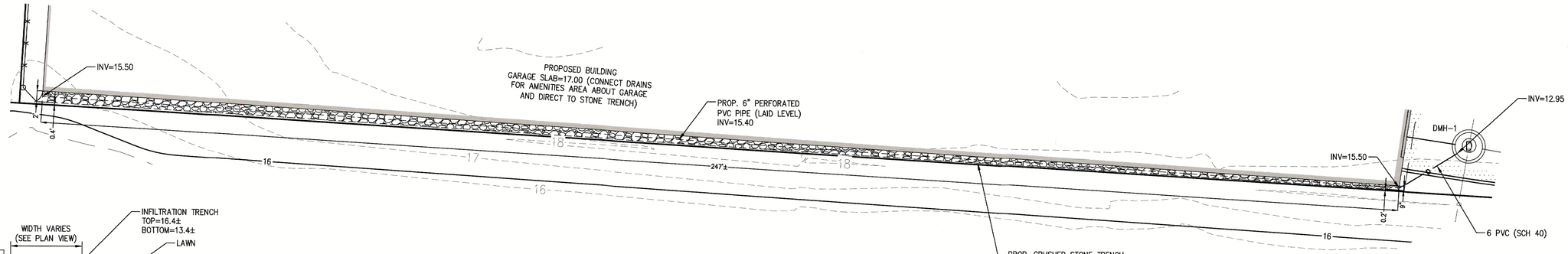

CRUSHED STONE TRENCH DETAIL
SCALE: 1" = 10'

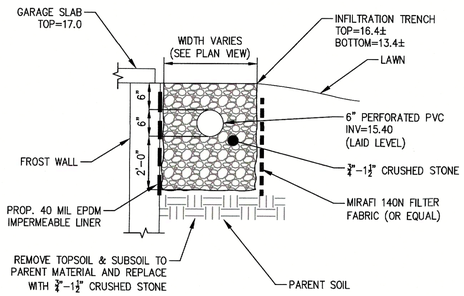

CRUSHED STONE TRENCH DETAIL
NOT TO SCALE

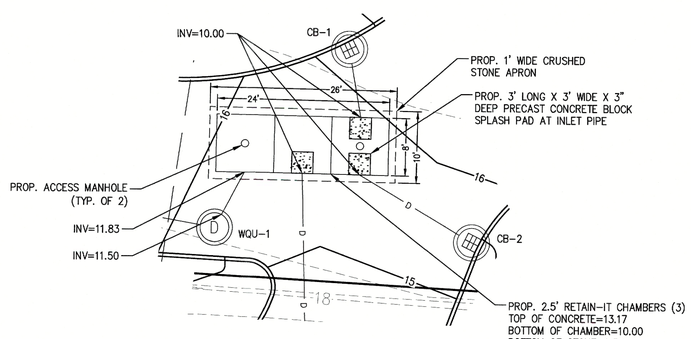

SUBSURFACE RECHARGE SYSTEM
PLAN VIEW (RS-1)
SCALE: 1" = 10'

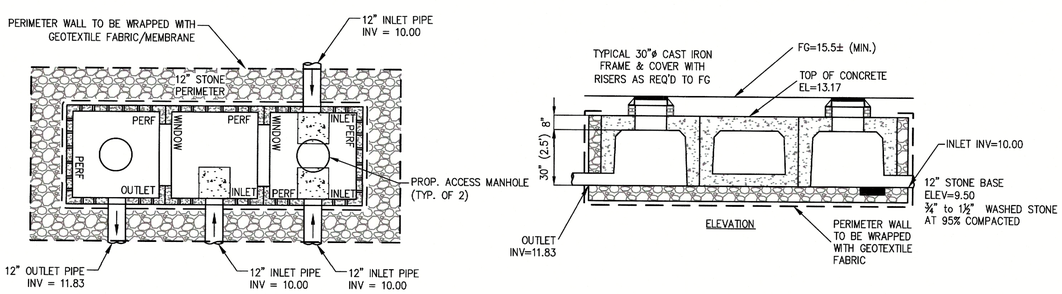

SUBSURFACE RECHARGE
SYSTEM DETAIL (RS-1)
(NOT TO SCALE)

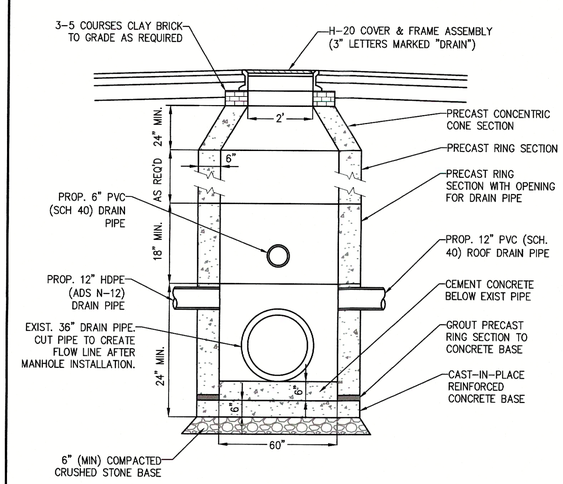

NOTES:
1. EXISTING DRAIN PIPE LOCATION, SIZE AND MATERIAL SHALL BE VERIFIED IN FIELD.
2. IF LEDGE ENCOUNTERED BELOW EXISTING DRAIN PIPE, REINFORCING DOWELS SHALL BE SET A MIN. OF 6" INTO EXISTING LEDGE PRIOR TO CASTING BASE OF DROP-OVER MANHOLE.

DROP-OVER DRAIN MANHOLE
(NOT TO SCALE)

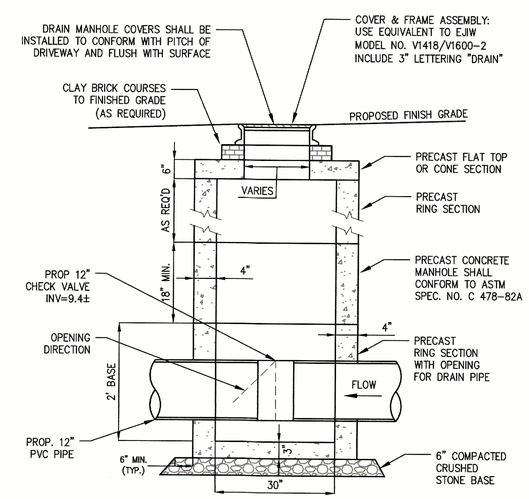

CHECK VALVE ACCESS MANHOLE
(NOT TO SCALE)

The Morin-Cameron GROUP, INC.
CIVIL ENGINEERS | ENVIRONMENTAL CONSULTANTS
LAND SURVEYORS | LAND USE PLANNERS
18 CENTRAL STREET, HAVERHILL, MASSACHUSETTS 01832
P: 978-777-8588, W: WWW.MORINCAMERON.COM

COMMONWEALTH OF MASSACHUSETTS
DANIEL J. POWELL
CIVIL
No. 50039
REGISTERED PROFESSIONAL ENGINEER
6-9-2025

SURVEY BY: OTHERS
DRAFTED BY: D.J.P.
CHECKED BY: S.P.C.
APPROVED BY: D.J.P.
SCALE: AS NOTED
DATE: MARCH 7, 2025

REVISIONS

NO.	DESCRIPTION	DATE
1	REVISE PER PEER REVIEW COMMENTS	5-2-2025
2	REVISE PER 2ND PEER REVIEW COMMENTS	6-2-2025
3	ADD/UPDATE LANDSCAPING FEATURES	6-9-2025

MULTIFAMILY SITE REDEVELOPMENT PLANS
FOR
85 WATER STREET, HAVERHILL, MASSACHUSETTS
(ASSESSOR'S MAP 200, BLOCK 4, LOTS 1 & 3 & ASSESSOR'S MAP 207, BLOCK 2, LOT 1A)
PREPARED FOR:
85 WATER STREET REDEVELOPMENT, LLC

CONSTRUCTION DETAILS IV

DRAWING NO. C-9

PROJ. #3979
DRAWING: 3979_MAIN.DWG

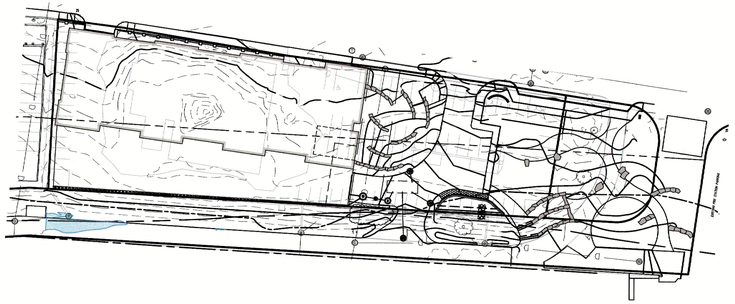

ELEVATION 13
(SCALE: 1" = 60')

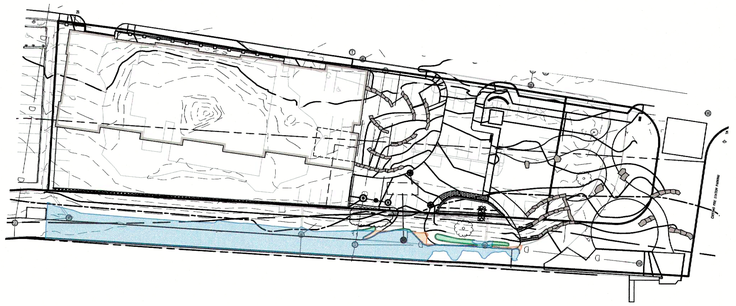

ELEVATION 14
(SCALE: 1" = 60')

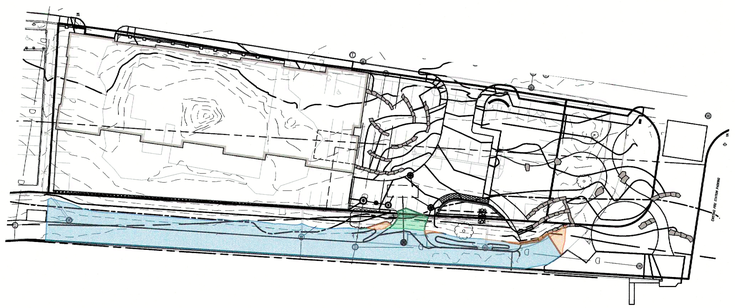

ELEVATION 15
(SCALE: 1" = 60')

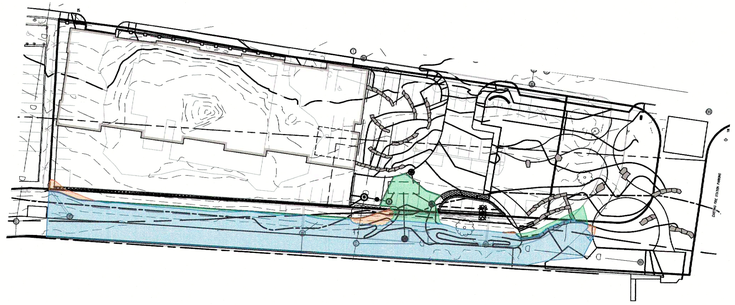

ELEVATION 16
(SCALE: 1" = 60')

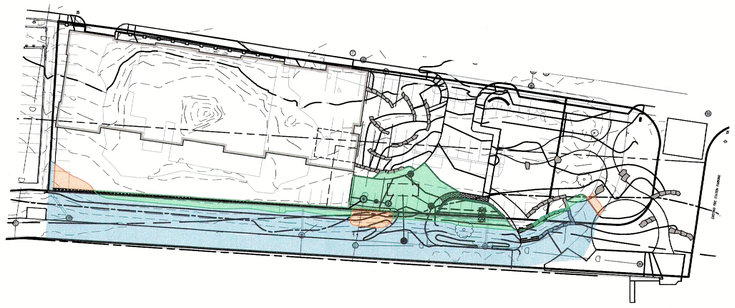

ELEVATION 17
(SCALE: 1" = 60')

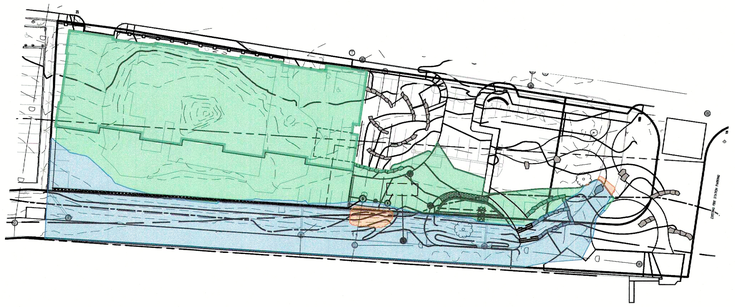

ELEVATION 18
(SCALE: 1" = 60')

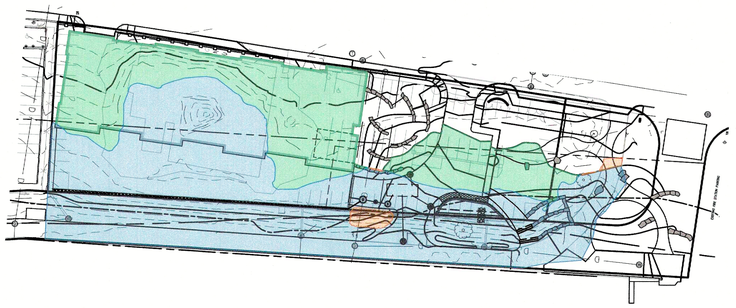

ELEVATION 19
(SCALE: 1" = 60')

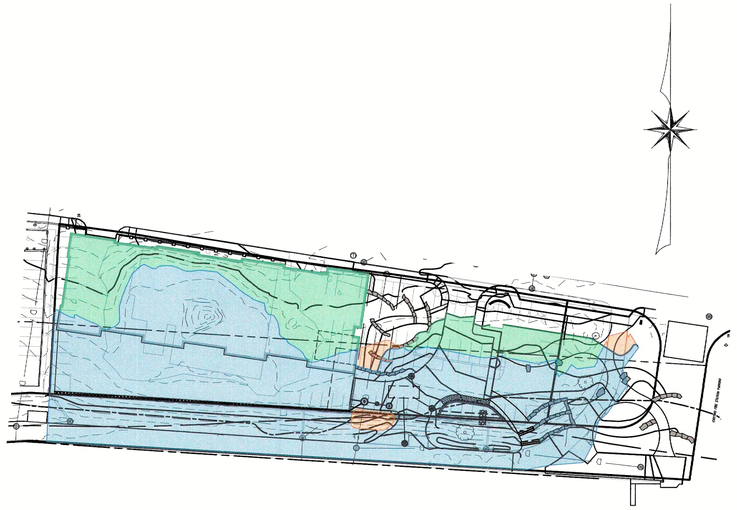

ELEVATION 20
(SCALE: 1" = 60')

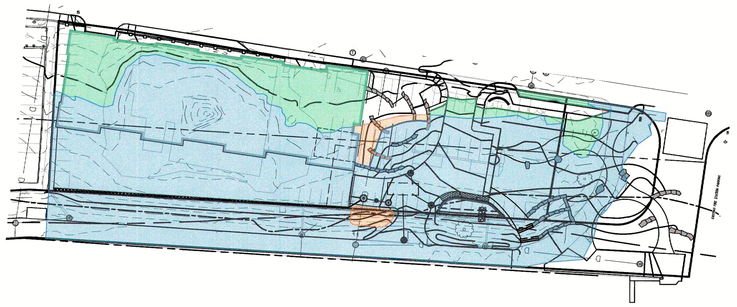

ELEVATION 21
(SCALE: 1" = 60')

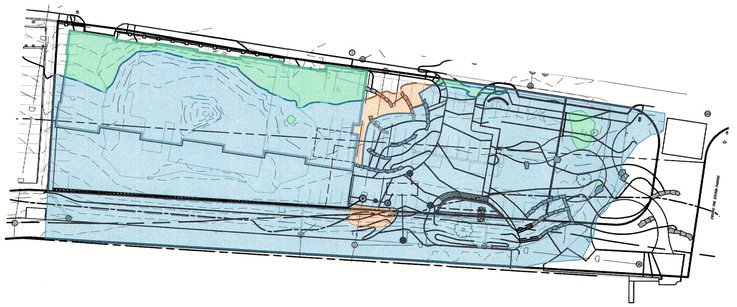

ELEVATION 22
(SCALE: 1" = 60')

PLAN
SCALE: 1" = 60'
0 30 60 120

LEGEND:

- AREA IN CUT
- AREA BEING MAINTAINED
- AREA IN FILL

The Morin-Cameron GROUP, INC.
CIVIL ENGINEERS | ENVIRONMENTAL CONSULTANTS
LAND SURVEYORS | LAND USE PLANNERS
66 ELM STREET, DANVERS, MASSACHUSETTS 01923
P: 978-777-8586, W: WWW.MORINCAMERON.COM

COMMONWEALTH OF MASSACHUSETTS
DANIEL J. POWERS
No. 50439
REGISTERED PROFESSIONAL ENGINEER
CIVIL
6-9-2025

SURVEY BY: OTHERS
DRAFTED BY: D.J.P.
CHECKED BY: S.P.C.
APPROVED BY: D.J.P.
SCALE: AS NOTED
DATE: MARCH 7, 2025

REVISIONS

NO.	DESCRIPTION	DATE
1	REVISE PER PEER REVIEW COMMENTS	5-2-2025
2	REVISE PER 2ND PEER REVIEW COMMENTS	6-2-2025
3	ADD/UPDATE LANDSCAPING FEATURES	6-9-2025

MULTIFAMILY SITE REDEVELOPMENT PLANS

FOR

85 WATER STREET, HAVERHILL, MASSACHUSETTS

(ASSESSOR'S MAP 200, BLOCK 4, LOTS 1 & 3 & ASSESSOR'S MAP 207, BLOCK 2, LOT 1A)

PREPARED FOR:

85 WATER STREET REDEVELOPMENT, LLC

CUT & FILL PLAN

DRAWING NO. C-10

PROJ. #3979
DRAWING: 3979_MAIN.DWG

SAMPLE PLANT SCHEDULE	
Common Name	**Latin Name**
Deciduous Trees	
American Hophornbeam	Ostrya virginiana
Hapdell American Sweetgum	Liquidambar styraciflua 'Hapdell'
Snowcloud Serviceberry	Amelanchier laevis 'Snow Cloud'
Redbud	Cercis canadensis
Shrubs	
Arnold Promise Witch Hazel	Hamamelis x intermedia 'Arnold Promise'
Diervilla x 'Kodiac Orange'	Kodiac Orange Diervilla
Inkberry Holly	Ilex glabra
Grey Owl Juniper	Juniperus virginiana 'Grey Owl'
GRO-Low Sumac	Rhus aromatica 'Gro-Low'
Wentworth Cranberry Bush Viburnum	Viburnum trilobum 'Wentworth'

Grasses, Perennials and Groundcovers	
Blue Gramma	Bouteloua gracilis
Clustered Field Sedge	Carex praegracilis
Little Bluestem	Schizachyrium scoparium
Oak Sedge	Carex pennsylvanica
White-tinged Sedge	Carex albicans
Butterfly Weed	Asclepias tuberosa
Cliff Goldenrod	Solidago drummondii
Eastern Beebalm	Monarda bradburiana
Eastern Red Columbine	Aquilegia canadensis
Golden Zizia	Zizia aurea
Husker Red Penstemon	Penstemon digitalis 'Husker Red'
Prairie Dropseed	Sporobulus heterolepsis
Purple Lovegrass	Eragrostis spectabilis
Purrsian Blue Catmint	Nepeta x faassenii 'Purrsian Blue'
Smallhead Blazing Star	Liatris microcephala
Stiff Aster	Ionactis linarifolia
Virginia Mountain Mint	Pycnanthemum virginianum
Golden Dew Tufted Hair Grass	Deschampsia cespitosa 'Goldtau'
Indian Grass	Sorghastrum nutans
Little Bluestem	Schizachyrium scoparium

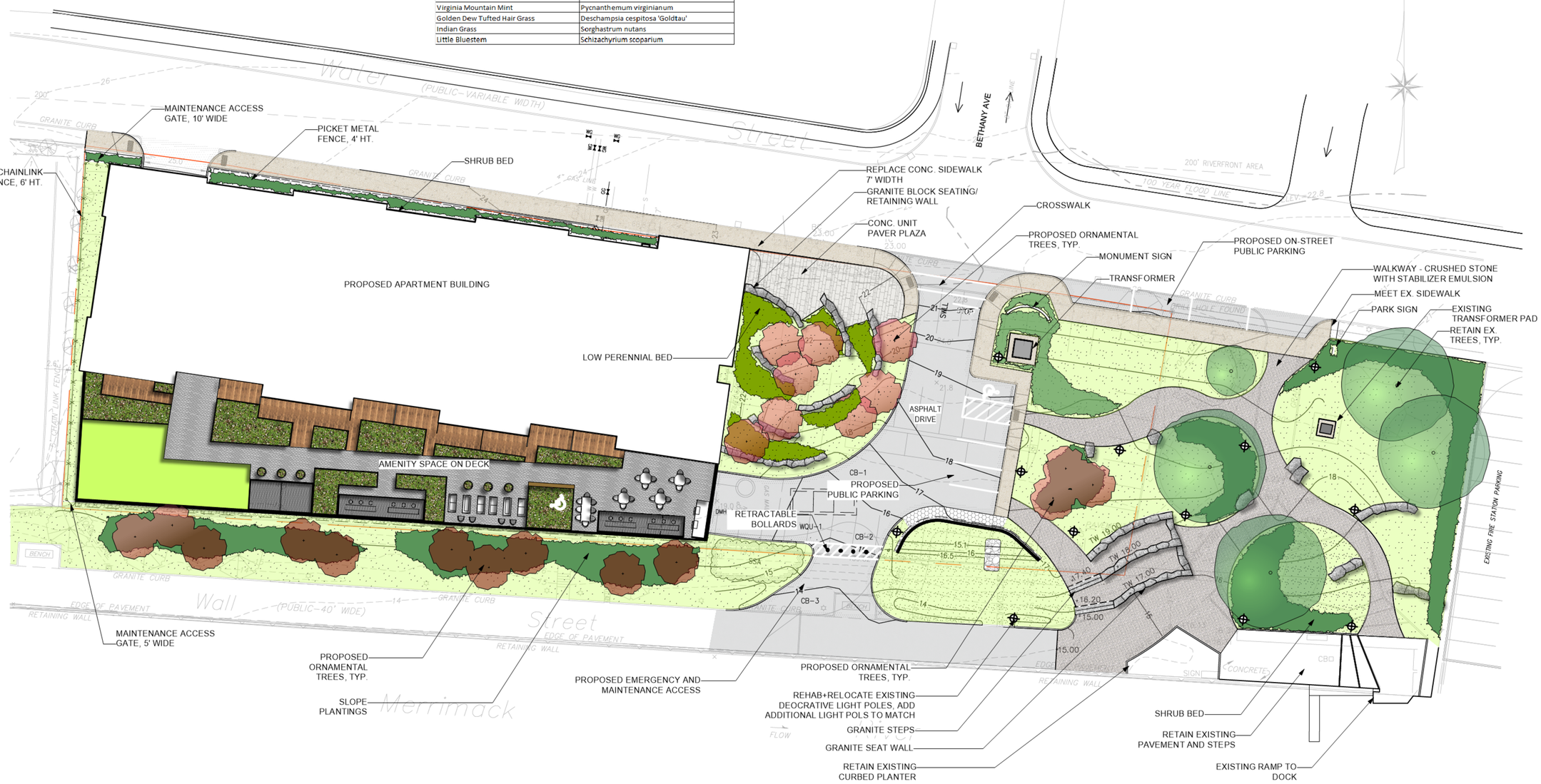

Multifamily Site Redevelopment Plans

85 Water Street
Haverhill, MA
(Assessor's Map 200, Block 4, Lot 3)

Developer

85 Water Street Development LLC

Andover Real Property Management Group Inc., Manager
231 Sutton St. 1B
North Andover, MA 01845

Landscape Architect

Radner Design Associates, Inc.

3 Allied Drive, Suite 303
Dedham, MA 02026
508.736.6144
www.RadnerDesign.com

Revision:

Drawn: kc

Checked by: mr

Scale: 1"=20'-0"

Issue:
CON COM SUBMISSION

Sheet Name:
Landscape Plan

Project No.:
21-11

Issue Date:
06.02.2025

Sheet No.:
L0.0

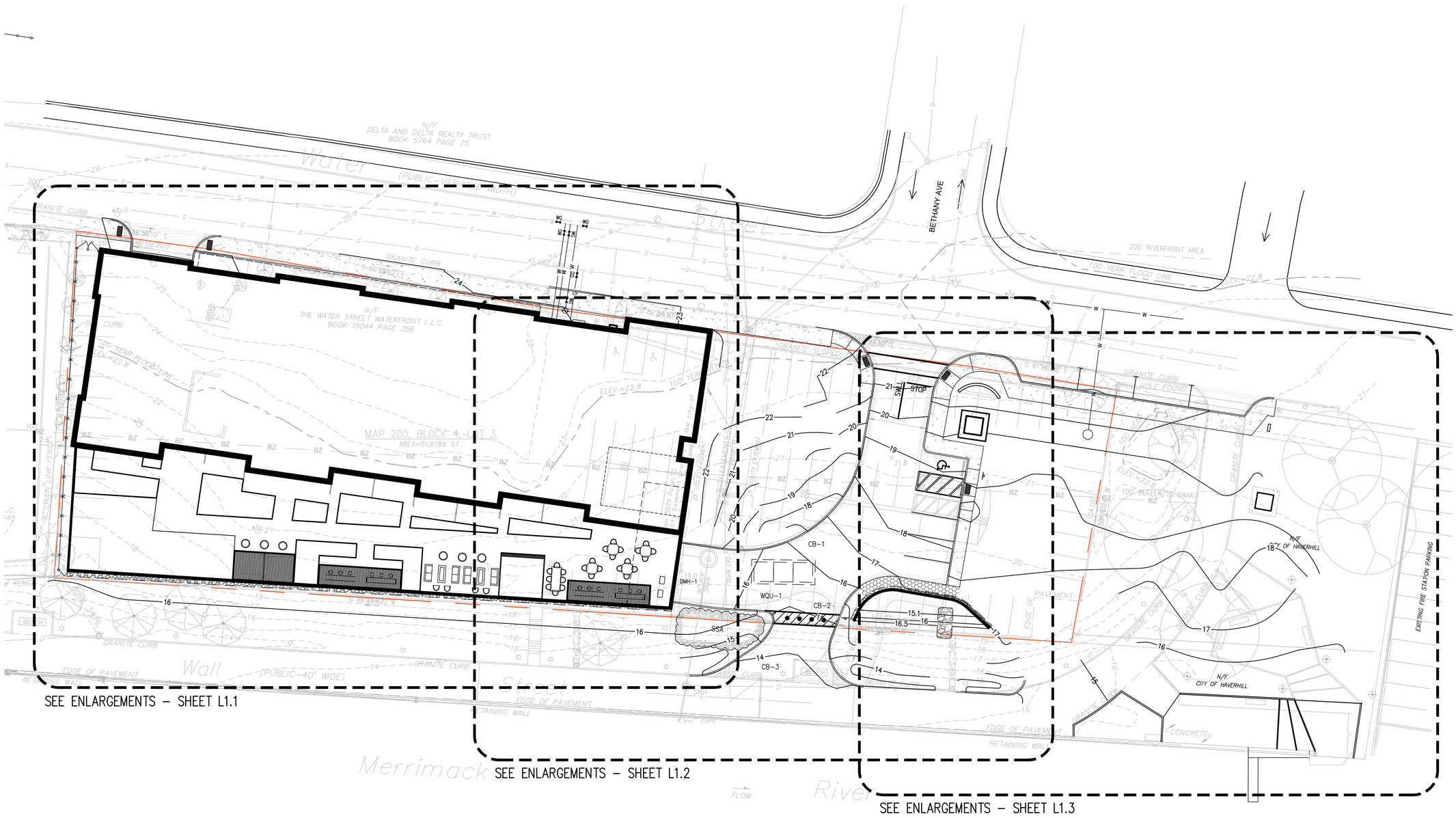

0' 20' 30'

NORTH

Multifamily Site Redevelopment Plans

85 Water Street
Haverhill, MA
(Assessor's Map 200, Block 4, Lot 3)

Developer

85 Water Street Development LLC

Andover Real Property Management Group Inc., Manager
231 Sutton St. 1B
North Andover, MA 01845

Landscape Architect

Radner Design Associates, Inc.

3 Allied Drive, Suite 303
Dedham, MA 02026
508.736.6144
www.RadnerDesign.com

Revision:

Drawn: kc

Checked by: mr

Scale: 1"=20'-0"

Issue:
CON COM SUBMISSION

Sheet Name:
Site Improvements Plan

Project No.:
21-11

Issue Date:
06.02.2025

Sheet No.:
L1.0

Multifamily Site Redevelopment Plans

85 Water Street
Haverhill, MA
(Assessor's Map 200, Block 4, Lot 3)

Developer

85 Water Street Development LLC

Andover Real Property Management Group Inc., Manager
231 Sutton St. 1B
North Andover, MA 01845

Landscape Architect

Radner Design Associates, Inc.

3 Allied Drive, Suite 303
Dedham, MA 02026
508.736.6144
www.RadnerDesign.com

Revision:

Drawn: kc

Checked by: mr

Scale: 1"=10'-0"

Issue:
CON COM SUBMISSION

Sheet Name:
Materials Enlargement Plan 1

Project No.:
21-11

Issue Date:
06.02.2025

Sheet No.:
L1.1

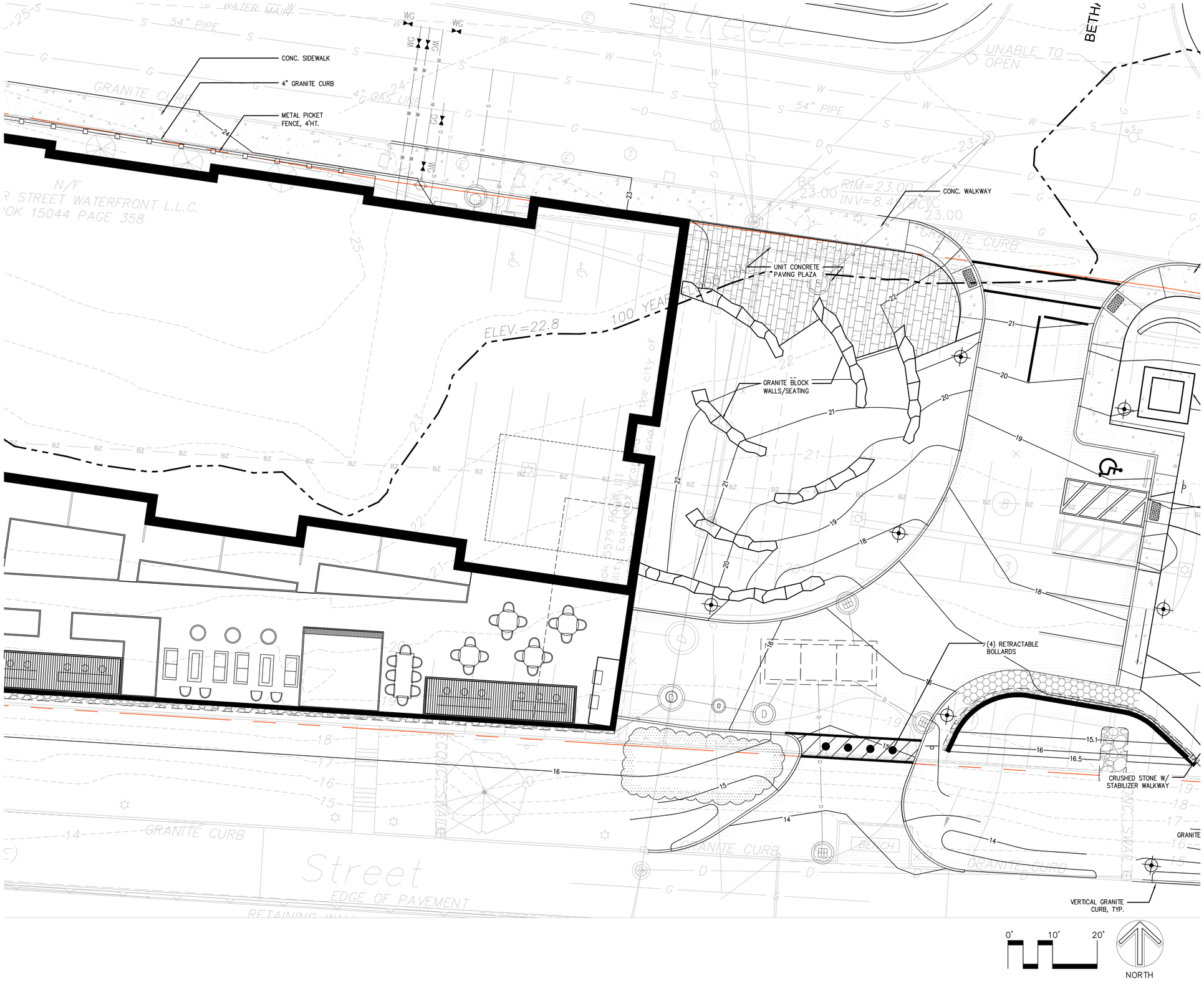

Multifamily Site Redevelopment Plans

85 Water Street
Haverhill, MA
(Assessor's Map 200, Block 4, Lot 3)

Developer

85 Water Street Development LLC

Andover Real Property Management Group Inc., Manager
231 Sutton St. 1B
North Andover, MA 01845

Landscape Architect

Radner Design Associates, Inc.

3 Allied Drive, Suite 303
Dedham, MA 02026
508.736.6144
www.RadnerDesign.com

Revision:

Drawn: kc

Checked by: mr

Scale: 1"=10'-0"

Issue:
CON COM SUBMISSION

Sheet Name:
Materials Enlargement Plan 2

Project No.:
21-11

Issue Date:
06.02.2025

Sheet No.:
L1.2

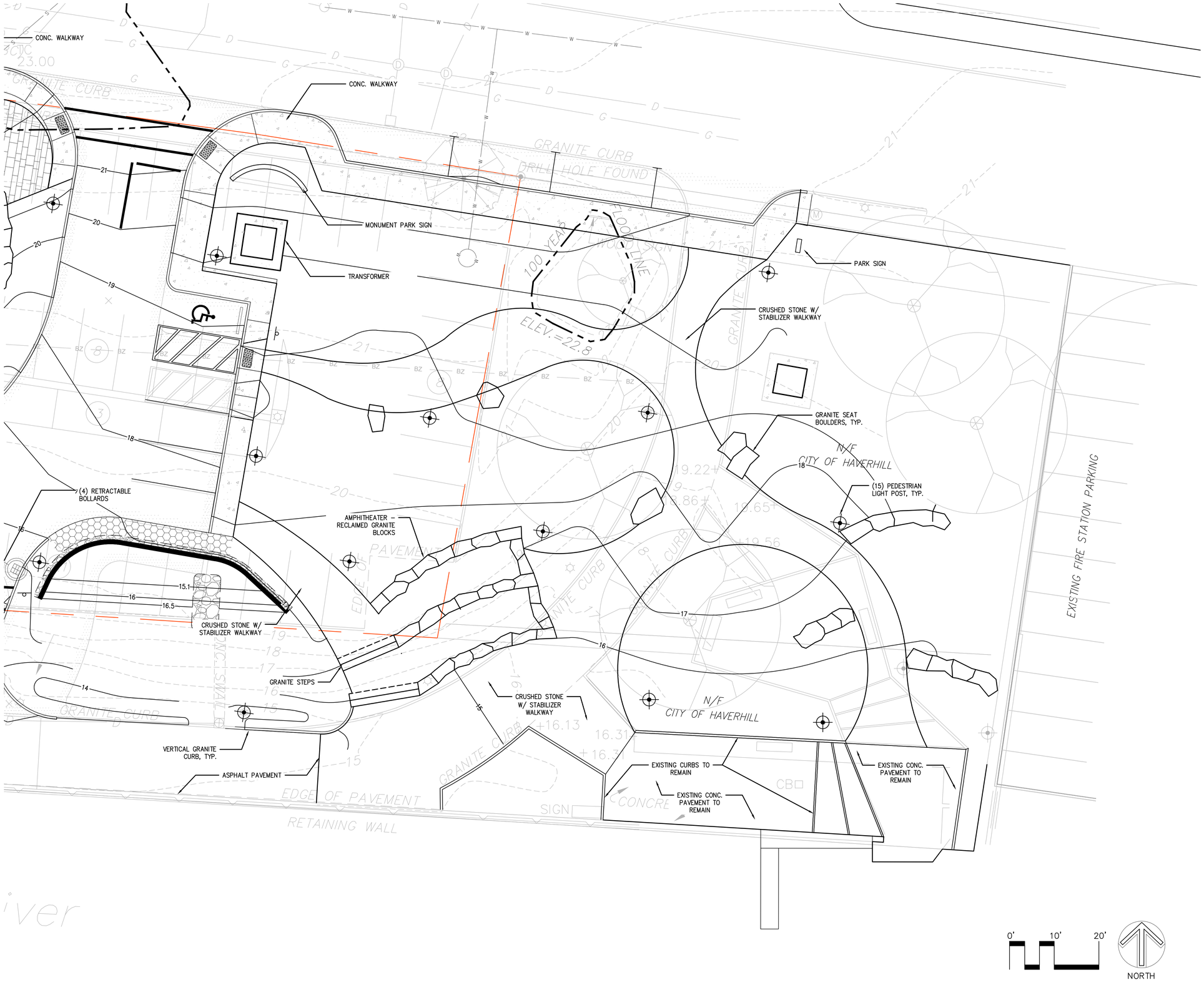

Multifamily Site Redevelopment Plans

85 Water Street
Haverhill, MA
(Assessor's Map 200, Block 4, Lot 3)

Developer

85 Water Street Development LLC

Andover Real Property Management Group Inc., Manager
231 Sutton St. 1B
North Andover, MA 01845

Landscape Architect

Radner Design Associates, Inc.

3 Allied Drive, Suite 303
Dedham, MA 02026
508.736.6144
www.RadnerDesign.com

Revision:

Drawn: kc

Checked by: mr

Scale: 1"=10'-0"

Issue:
CON COM SUBMISSION

Sheet Name:
Materials Enlargement Plan 3

Project No.:
21-11

Issue Date:
06.02.2025

Sheet No.:
L1.3

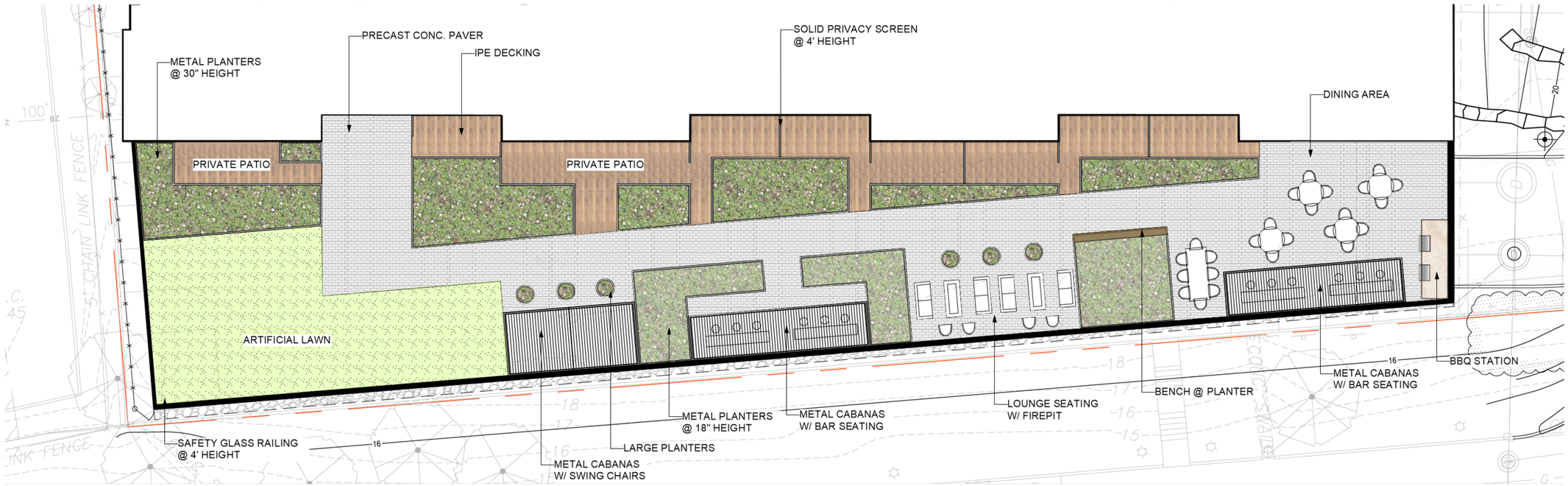

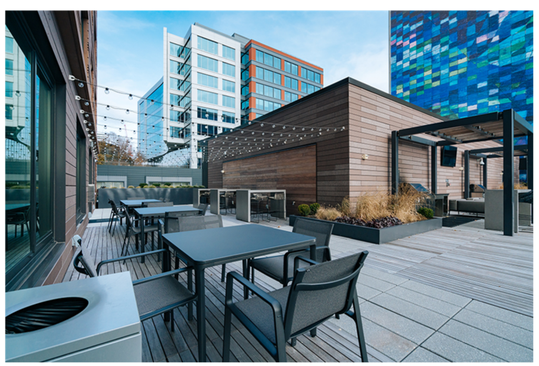

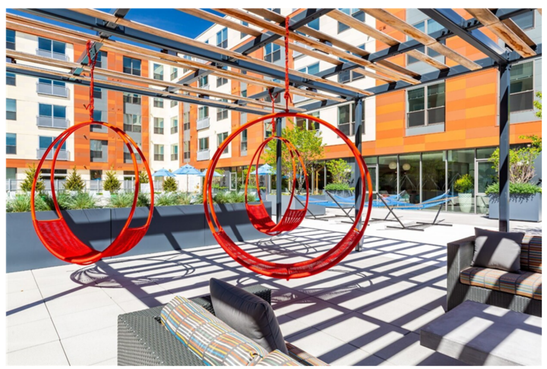

Multifamily Site Redevelopment Plans

85 Water Street
Haverhill, MA
(Assessor's Map 200, Block 4, Lot 3)

Developer

85 Water Street Development LLC

Andover Real Property Management Group Inc., Manager
231 Sutton St. 1B
North Andover, MA 01845

Landscape Architect

Radner Design Associates, Inc.

3 Allied Drive, Suite 303
Dedham, MA 02026
508.736.6144
www.RadnerDesign.com

Revision:

Drawn: kc

Checked by: mr

Scale: 1"=10'-0"

Issue:
CON COM SUBMISSION

Sheet Name:
Landscape Plan
Enlargement - Roof Deck

Project No.:
21-11

Issue Date:
06.02.2025

Sheet No.:
L1.4

EXISTING CONDITIONS




PROPOSED LANDSCAPE ELEMENTS

BOULDER BLOCK SEATING

TERRACED BOULDER SEATING/RETAINING WALLS

CRUSHED STONE W/ STABILIZER

RETRACTABLE STAINLESS STEEL BOLLARDS

BLACK PICKET METAL FENCE

PLANTINGS ON SLOPE

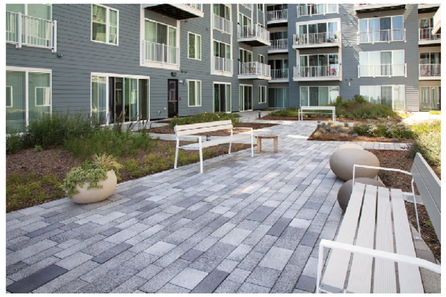

UNILOCK PAVER - ART LINE

PROPOSED DECK AMENITY SPACE ELEMENTS





Multifamily Site Redevelopment Plans

85 Water Street
Haverhill, MA
(Assessor's Map 200, Block 4, Lot 3)

Developer

85 Water Street Development LLC

Andover Real Property Management Group Inc., Manager
231 Sutton St. 1B
North Andover, MA 01845

Landscape Architect

Radner Design Associates, Inc.

3 Allied Drive, Suite 303
Dedham, MA 02026
508.736.6144
www.RadnerDesign.com

Revision:

Drawn: kc

Checked by: mr

Scale: NTS

Issue:
CON COM SUBMISSION

Sheet Name:
Landscape Details

Project No.:
21-11

Issue Date:
06.02.2025

Sheet No.:
L2.1